Rampion 2 WIND FARM

Rampion 2 Wind Farm

Category 6: Environmental Statement

Volume 4, Appendix 23.2: Traffic Generation Technical Note assessment (clean)

Date: February 2024

Revision B

Document Reference: 6.4.23.2
Pursuant to: APFP Regulation 5 (2) (a)
Ecodoc number: 004866580-02

© WSP Environment & Infrastructure Solutions UK Limited

Document revisions

Revision	Date	Status/reason for issue	Author	Checked by	Approved by
A	04/08/2023	Final for DCO Application	WSP	RED	RED
B	28/02/2024	Update for ES Addendum	WSP	RED	RED

© WSP Environment & Infrastructure Solutions UK Limited

Contents

1.	**Introduction**	**7**
1.1	Overview	7
1.2	Context	7
2.	**Relevant legislation, policy and other information and guidance**	**9**
2.1	Introduction	9
2.2	National planning policy	9
2.3	Other relevant information and guidance	18
3.	**Existing Transport Network**	**21**
3.1	Study Area 1 – onshore	21
	Strategic Road Network	21
	Local Highway Network	22
	Baseline traffic flows	26
3.2	Study Area 2 – onshore impacts of offshore works	33
	Strategic Road Network	34
	Local Highway Network	34
	Baseline traffic flows	35
	Future baseline	36
4.	**Proposed Development**	**40**
4.1	The onshore elements of the Proposed Development	40
4.2	The offshore elements of the Proposed Development	43
5.	**Key Construction Traffic Assumptions**	**46**
5.1	Introduction	46
5.2	Overview	46
5.3	Onshore cable corridor	46
5.4	Temporary construction compounds	50
5.5	Onshore substation	50
5.6	Work section breakdown	51
5.7	Construction activities	51
5.8	Construction Management Base	52
5.9	Scheduling	53
5.10	Construction materials, personnel, plant and equipment requirements	53

6. Construction traffic generation 54
6.3 Construction Traffic Distribution 55
6.6 ES Addendum Further Sensitivity Tests – 64

7. Operation and maintenance traffic generation 73
7.1 Overview 73
7.2 Traffic generation 73

8. Decommissioning traffic generation 75
8.1 Onshore decommissioning 75
Onshore cable 75
Onshore substation 75
Offshore 76

9. Glossary of terms and abbreviations 77

10. References 79

Annex A Traffic calculations 1

Annex B Figures 1

List of Tables

Table 2-1 National planning policy relevant to transport 9
Table 2-2 Local transport / planning policy relevant to transport 14
Table 3-1 A/B roads within Study Area 1 21
Table 3-2 2021 baseline traffic data (AADF) – Study Area 1 28
Table 3-3 Baseline data – 2022 Traffic survey 30
Table 3-5 A/B Roads within Study Area 2 34
Table 3-6 2021 baseline traffic data (AADF) – Study Area 2 36
Table 5-1 Accesses 47
Table 6-1 Two-way vehicle movement summary 55
Table 6-2 HGV construction traffic distribution 56
Table 6-3 HGV access routes 56
Table 6-4 HGV access routes 57
Table 6-5 LGV construction staff traffic distribution 58
Table 6-6 MOV circular construction routes 59
Table 6-7 Total two-way construction movements by access 60
Table 6-8 Peak weekly movements by access 66
Table 6-9 Onshore construction traffic impact per receptor 68
Table 6-11 Onshore construction traffic impact per new receptors 71
Table 7-1 Onshore operation and maintenance traffic percentage impact per highways link – Study Area 2 74

© WSP Environment & Infrastructure Solutions UK Limited

Table 8-1 Onshore substation decommissioning traffic percentage impact per highways link 76

List of Graphics

Graphic 5-1 Overall Construction Schedule 53
Graphic 6-1 Week 2, Total Peak Week excerpt from network diagram 65
Graphic 6-2 Total vehicles on a week-by-week basis 65
Graphic 6-3 Impact Assessment based on Total peak week 65
Graphic 6-4 Impact Assessment based on HGV peak week 66

List of Annexes

Annex A Traffic Calculations
Annex B Figures
Figure 23.2.1 Onshore route Temporary Construction Compound (TCC) Sections and accesses from public highways

© WSP Environment & Infrastructure Solutions UK Limited

Page intentionally blank

© WSP Environment & Infrastructure Solutions UK Limited

Executive Summary

This Traffic Generation Technical Note summarises the methodology used to calculate the traffic generation of the Proposed Development. It includes a summary of the inputs relating to the construction methodology and programme, as well as around routeing of vehicles. This should be read in conjunction with **Chapter 23: Transport, Volume 2** of the **Environmental Statement (ES)** **[APP-064]** and **Chapter 32:ES Addendum** of the ES (**Document Reference 6.2.23**).

© WSP Environment & Infrastructure Solutions UK Limited

Page intentionally blank

© WSP Environment & Infrastructure Solutions UK Limited

1. Introduction

1.1 Overview

1.1.1 This Traffic Generation Technical Note (TGTN) outlines the traffic data generation process for the Rampion 2 (the 'Proposed Development') covering the onshore elements of the Proposed Development including the landfall, onshore cable corridor, temporary construction compounds (TCCs), the onshore substation at Oakendene and the existing National Grid substation extension at Bolney.

1.1.2 This TGTN covers the construction, operation and maintenance and decommissioning phases of the Proposed Development.

1.1.3 The impacts of traffic are covered separately, in **Chapter 23: Transport, Volume 2** of the Environmental Statement (ES) **[APP-064]** and in **Chapter 32: ES Addendum** of the ES (Document Reference: 6.2.32), while measures to mitigate the impacts of construction traffic, construction workforce, operational traffic generation, abnormal loads and on public rights of way are covered respectively in the:

- **Outline Operational Travel Plan (OTP)** (Document Reference: 7.5);
- **Outline Construction Traffic Management Plan (CTMP)** (Document Reference: 7.6);
- **Outline Construction Workforce Travel Plan (CWTP)** (Document Reference: 7.7);
- **Outline Public Rights of Way Management Plan (PRoWMP)** (Document Reference: 7.8); and
- **Appendix 23.1: Abnormal Indivisible Loads Assessment** of **Chapter 23: Transport, Volume 2** of the ES **[APP-064].**

1.2 Context

1.1.4 This TGTN is an update to the version that was submitted as part of the DCO Application.

1.1.5 The following sections have been updated:

- Section 1 – Introduction:
  - Updated to reflect the changes included within this updated **TGTN [APP-197].**
- Section 2 – Relevant legislation, policy and other information and guidance:
  - Updated to reflect new National Planning Policy Framework and National Policy Statement policy documents.
- Section 3 – Existing Transport Network:

- Local Highway Network updated to include the new highway links that have been assessed in **Chapter 32: ES Addendum** of the ES (Document Reference: 6.2.32).
- Baseline Traffic flows to reflect the traffic data for the additional receptors used in the **ES Addendum** (Document Reference: 6.2.32).
- Future Baseline to reflect the traffic data and growth applied to the traffic data for the additional receptors used in **Chapter 32: ES Addendum** of the ES (Document Reference: 6.2.32).

- Proposed Development:
  - Minor textural updates in particular to the core working hours.
- Section 5 - Key Construction Traffic Assumptions:
  - New section covering previous Sections 5.2-5.8 of this TGTN.
- Section 6 - Construction traffic generation:
  - Outlines the methodology used to assess Peak Week 70, and section-based peaks in **Chapter 23: Transport, Volume 2** of the ES **[APP-064]**.
  - New information added on the methodology used to assess sensitivity tests, such as the peak at each receptor as assessed in **Chapter 32: ES Addendum** of the ES (Document Reference: 6.2.32).
- Section 7 – Operation and maintenance traffic generation
  - Minor updates to the text in line with **Chapter 23: Transport, Volume 2** of the ES **[APP-064]**.
- Section 8 – Decommissioning traffic generation
  - Minor updates to the text in line with **Chapter 23: Transport, Volume 2** of the ES **[APP-064]**.

Structure of this Appendix:

1.1.6 The remainder of this Appendix is structured as follows:

- **Section 2: Relevant legislation, policy and other information and guidance;**
- **Section 3: Existing transport network;**
- **Section 4: Proposed Development;**
- **Section 5: Key Construction traffic Assumptions;**
- **Section 6: Construction traffic generation;**
- **Section 7: Operation and Maintenance traffic generation;**
- **Section 8: Decommissioning traffic generation;**
- **Section 9: Glossary of terms and abbreviations;** and
- **Section 10: References.**

© WSP Environment & Infrastructure Solutions UK Limited

2. Relevant legislation, policy and other information and guidance

2.1 Introduction

2.1.1 This assessment has been undertaken in accordance with relevant transport related planning policy, legislation and guidance at the national, regional and local level.

2.2 National planning policy

2.2.1 **Table 2-1** lists the national planning policy relevant to this TGTN.

Table 2-1 National planning policy relevant to transport

Policy description	How and where considered in this document
The Overarching National Policy Statement for Energy (EN-1) (DECC, 2011)	
Paragraph 5.13.1 states "*The transport of materials, goods and personnel to and from a development during all project phases can have a variety of impacts on the surrounding transport infrastructure and potentially on connecting transport networks, for example through increased congestion. Impacts may include economic, social and environmental effects. Environmental impacts may result particularly from increases in noise and emissions from road transport. Disturbance caused by traffic and abnormal loads generated during the construction phase will depend on the scale and type of the proposal.*"	The transport Study Area (shown in **Figure 7.6.3** of the **CTMP** (Document Reference: 7.6) has been established through discussions with the relevant Highway Authorities. The **Outline Construction Traffic Management Plan (CTMP)** (Document Reference: 7.6), **Outline Public Rights of Way Management Plan (PRoWMP)** (Document Reference: 7.8), and **Appendix 23.1**: **Abnormal Indivisible Loads assessment, Volume 4** of the ES (Document Reference: 6.4.23.1) are also submitted as part of the DCO Application. These documents deal with other impacts and measures of the Proposed Development with respect to transport.
Paragraph 5.13.2 states "*The consideration and mitigation of transport impacts is an essential part of Government's wider policy objectives for sustainable development as set out in Section 2.2 of this NPS*"	Section 23.9 to 23.11 of **Chapter 23: Transport, Volume 2** of the ES **[APP-064]** identifies possible transport impacts and ways to mitigate them. The environmental measures to mitigate these impacts are embedded into the design.

Policy description	How and where considered in this document
Paragraph 5.13.3 states "*If a project is likely to have significant transport implications, the applicant's ES (see Section 4.2) should include a transport assessment, using the NATA/WebTAG methodology stipulated in Department for Transport guidance, or any successor to such methodology. Applicants should consult the Highways Agency and Highways Authorities as appropriate on the assessment and mitigation*"	This TGTN has been prepared and submitted with the DCO Application in accordance with guidance and best practice and its scope has been discussed with the relevant Highway Authorities including National Highways. **Chapter 23: Transport, Volume 2** of the ES **[APP-064]** identifies the highway links which may be subject to possible significant transport effects and any environmental measures to mitigate these transport effects.
Paragraph 5.13.4 states *"Where appropriate, the applicant should prepare a travel plan including demand management measures to mitigate transport impacts. The applicate should also provide details of proposed measures to improve access by public transport, walking and cycling, to reduce the need for parking associate with the proposal and to mitigate transport impacts."*	Where appropriate, it is expected that construction worker movements by sustainable means will be facilitated and encouraged. However, it is recognised that the linear nature of the works, the absence of a fixed permanent work site along the Rampion 2 onshore temporary onshore cable corridor and the rural nature of much of the corridor may make it difficult to implement a standard construction travel plan. Many of the accesses are not adjacent to sustainable links such as bus stops and rail lines and the nature of the work means that staff traveling to site need to take equipment and work materials which necessitates the use of vans.
Paragraph 5.13.5 states *"If additional transport infrastructure is proposed, applicants should discuss with network providers the possibility of co-funding by Government for any third-party benefits. Guidance has been issued in England which explains the circumstances where this may be possible, although the Government cannot guarantee in advance that funding will be available for any given uncommitted scheme at any specified time"*	Additional transport infrastructure is limited to the provision of a number of mostly temporary construction accesses along the onshore cable corridor. Accesses will be removed and the land reinstated following completion. The **Outline CTMP** (Document Reference: 7.6) provides further details on access and is submitted as part of the DCO Application.
Paragraph 5.13.11 states *"The IPC [Planning Inspectorate] may attach*	Proposed heavy goods vehicle (HGV) routes are identified and restrictions on HGV timing are proposed to avoid adverse effects on sensitive receptors, particularly schools as set out within the **Outline CTMP** (Document Reference: 7.6). The design of the construction works will avoid the risk of HGV

Policy description	How and where considered in this document
requirements to a consent where there is likely to be substantial HGV traffic that: • ***Control numbers of HGV movements to and from the site in a specified period during its construction and possibly on the routing of such movements;*** • ***Make sufficient provision for HGV parking, either on the site or at dedicated facilities elsewhere, to avoid 'overspill' parking on public roads, prolonged queuing on approach roads and uncontrolled on-street HGV parking in normal operating conditions; and*** • ***Ensure satisfactory arrangements for reasonably foreseeable abnormal disruption, in consultation with network providers and the responsible police force***"	parking on the surrounding highway. The transport of AILs has been subject to necessary assessment within **Appendix 23.1: Abnormal Indivisible Loads Assessment, Volume 4** of the ES (Document Reference: 6.4.23.1) and is expected to cause minimal disruption.
Overarching National Policy Statement for Energy (EN-1, March 2023 (DESNZ, 2023a)	
NPS EN-1 (2023) contains the generic requirements for the assessment of impacts arising from traffic associated with design, construction and operation of renewable energy infrastructure. Requirements not previously set out in the NPS EN-1 (2011) are set out below:	
Paragraph 5.14.7: The applicant should also provide details of proposed measures to improve access by active, public and shared transport to: ***"• reduce the need for parking associated with the proposal;*** ***• contribute to decarbonisation of the transport network;***	Where appropriate, it is expected that movement by sustainable means will be facilitated and encouraged. Sustainable links such as bus stops and rail lines are discussed in the **Outline Construction Workforce Travel Plan (CWTP) [APP-229]** and **Outline Operational Travel Plan [APP-227].**

Policy description	How and where considered in this document
• reduce the need to travel; and • secure behavioural change and modal shift through an offer of genuine modal choice and to mitigate transport impacts."	
Paragraph 5.14.8: ***"The assessment should also consider any possible disruption to services and infrastructure (such as road, rail and airports)."***	The objectives of the Delivery Management System are to minimise the number of construction vehicles on the road and ensure construction vehicles do not exceed any agreed restrictions, for example peak period traveling through certain towns / villages / junctions. This is included in the **Outline Construction Traffic Management Plan (CTMP) [APP-228].**
Paragraph 5.14.11: ***"Where mitigation is needed, possible demand management measures must be considered. This could include identifying opportunities to: • reduce the need to travel by consolidating trips, • locate development in areas already accessible by active travel and public transport, • provide opportunities for shared mobility, • re-mode by shifting travel to a sustainable mode that is more beneficial to the network, • retime travel outside of the known peak times, • reroute to use parts of the network that are less busy."***	Trip consolidation and other demand management measures will be implemented are discussed in the **Outline Construction Workforce Travel Plan (CWTP) [APP-229]** and **Outline Operational Travel Plan [APP-227].**
Paragraph 5.14.12: ***"If feasible and operationally reasonable, such mitigation should be required, before considering requirements for the provision of new inland transport infrastructure to deal with remaining transport impacts. All stages of the project should support and encourage a modal shift of freight from road to more environmentally sustainable alternatives, such as rail, cargo bike, maritime and inland***	Trip consolidation, sustainable travel and other demand management measures are discussed in the **Outline Construction Workforce Travel Plan (CWTP) [APP-229]** and **Outline Operational Travel Plan [APP-227]**. No new operational road infrastructure is proposed, however accesses and car parks are proposed as part of the Proposed Development.

Policy description	How and where considered in this document
waterways, as well as making appropriate provision for and infrastructure needed to support the use of alternative fuels including charging for electric vehicles."	
Paragraph 5.14.13: ***"Regard should always be given to the needs of freight at all stages in the construction and operation of the development including the need to provide appropriate facilities for HGV drivers as appropriate."***	The needs of freight traffic is considered within the **Outline Code of Construction Practice (CoCP)** **[APP-224]**.
Paragraph 5.14.16: ***"Applicants should consider the DfT policy guidance "Water Preferred Policy Guidelines for the movement of abnormal indivisible loads" when preparing their application."***	The transport of abnormal indivisible loads (AIL) has been subject to assessment within the **Appendix 23.1: Abnormal Indivisible Load assessment**, **Volume 4** of the ES **[APP-196]** and is expected to result in minimal disruption.
National Planning Policy Framework (NPPF) (Ministry of Housing, Communities and Local Government, last updated 20 December 2023)	
The NPPF is the primary source of national planning guidance in England.	Whilst the NPPF is not directly applicable to Nationally Significant Infrastructure Projects (NSIPs), it provides context to the TGTN as well as **Chapter 23: Transport, Volume 2** of the ES **[APP-064]** (Document Reference: 6.2.23).
Paragraph 115 of the NPPF states that ***"development should only be prevented or refused on highways grounds if there would be an unacceptable impact on highway safety, or the residual cumulative impacts on the road network would be severe."***	**Chapter 23: Transport, Volume 2** of the ES (Document Reference: 6.2.23), sets out the results of the assessment of traffic effects including highways safety (including accident assessment).
Paragraph 117 of the NPPF states that ***"all developments that will generate significant amounts of movement should be required to provide a travel plan, and the***	This TGTN has been developed with reference to the criteria in Paragraph 113, the opportunities for sustainable transport,

Policy description	How and where considered in this document
application should be supported by a transport statement or transport assessment so that the likely impacts of the proposal can be assessed."	access and road safety, and the need for any transport improvements.
The document sets out that the Transport Statement (TS)/TA should account for: • **the opportunities for sustainable transport modes have been taken up depending on the nature and location of the site, to reduce the need for major transport infrastructure;** • **safe and suitable access to the site can be achieved for all people; and** • **improvements can be undertaken within the transport network that cost effectively limit the significant impacts of the development. Development should only be prevented or refused on transport grounds where the residual cumulative impacts of development.**	For understanding transport impacts, this TGTN is supported by the **Outline CTMP** (Document Reference: 7.6), **Outline CWTP** (Document Reference: 7.7), **Outline PRoWMP** (Document Reference: 7.8) and **Appendix 23.1: Abnormal Indivisible Loads assessment** of the ES (Document Reference: 6.4.23.1).

2.2.2 **Table 2-2** lists the local planning policy relevant to the assessment of the effects on transport receptors.

Table 2-2 Local transport / planning policy relevant to transport

Policy description	Relevance to assessment
West Sussex Transport Plan 2022-36 (West Sussex County Council, 2022)	
4.23-4.25 and 6.4: Walking. The policy aims to maintain the existing pedestrian provision in West Sussex, including PRoW provision, and, where possible provide new infrastructure to create new connections and routes for pedestrians particularly for leisure.	The construction of the onshore cable has the potential to temporarily affect the Public Right of Way (PRoW) infrastructure in West Sussex. The **Outline PRoWMP** (Document Reference: 7.8) outlines all PRoW effects and environmental measures proposed.

Policy description	Relevance to assessment
More information is also included on PRoWs in the WSCC Rights of Way Management Plan 2018-2028.	
4.26-4.29 and 6.4: Cycling. This policy aims to protect the existing cycling provision and promote cycling as a form of sustainable transport. It also identifies a requirement to construct and improve cycling infrastructure to connect local cycle networks in line with the LCWIPs.	The construction of the onshore cable has the potential to temporarily affect local and nationally strategic cycle routes in West Sussex. A review of the local cycle routes has been undertaken within this document in **Section 3** and sets out that impacts on National Cycle Network (NCN) routes will not be significant.
4.33-4.39 and 6.12: Shared Transport Services. This policy proposes a range of measures to promote and improve public transport in West Sussex. Measures include the maintenance of public transport to a good standard and the provision of new infrastructure – such as bus lanes- to improve the existing provision where this is possible.	The construction of the onshore cable has the potential to temporarily affect local bus routes in West Sussex. A review of local bus routes is included in **Section 3**.
4.64-4.66 and 6.25: Freight. This policy sets out the measures which are to be used to manage the movement of freight during the plan period. The policy identifies measures to be used, including a lorry route network around West Sussex and investment into major infrastructure improvements on the A27.	The policy and HGV route network have been considered when identifying construction HGV routes associated with the Proposed Development set out in **Section 4**. The HGV access strategy avoids Findon Valley, a key route restriction within the Freight Movement and Management Plan.
Draft Horsham District Local Plan 2019-2036 (Horsham District Local Council, 2019)	
Strategic policy 41 – Infrastructure Provision. This policy states that development will only be supported if local infrastructure has adequate capacity to support the development. Suitable mitigation should be proposed where local	Consideration of transport effects and requirements for environmental measures. **Chapter 23: Transport, Volume 2** of the ES (Document Reference: 6.2.23) sets out the results of the assessment of the traffic effects on local and strategic highways links.

Policy description	Relevance to assessment
infrastructure does not have the capacity to accommodate development.	
Strategic policy 42 – Sustainable Transport. This policy sets out the conditions in which development will be supported for sustainable transport. The policy states "*development will be supported if it:* *Provides safe and suitable access for all vehicles, pedestrians, cyclists, horse riders, public transport and the delivery of goods.* *Minimises the distance people need to travel and minimises conflicts between traffic, cyclists and pedestrians.* *Prioritises and provides safe and accessible walking and cycling routes and is integrated with the wider network of routes, including public rights of way and cycle paths.* *Includes opportunities for sustainable transport which reduce the need for major infrastructure and cut carbon emissions.* *Develops innovative and adaptable approaches to public transport in the rural areas of the District.* *Maintains and improves the existing transport system (pedestrian, cycle, rail and road).* *Is accompanied by an agreed Green Travel Plan where it is necessary to minimise a potentially significant impact of the development of the wider area, or as a result of needing to address an existing local traffic problem."*	The construction of the onshore cable has the potential to temporarily affect PRoW, local bus routes and cycle routes in Horsham. The **Outline PRoWMP** (Document Reference: 7.8) outlines all PRoW effects and environmental measures proposed. A review of the local cycle routes has been undertaken within the **Chapter 23: Transport, Volume 2** of the ES (Document Reference: 6.2.23) which sets out the potential effects on NCN routes. A review of local bus routes has been undertaken within the **Chapter 23: Transport, Volume 2** of the ES (Document Reference: 6.2.23) which sets out the potential effects on bus routes.
Mid Sussex District Plan 2014-2031 (Mid Sussex District Council, 2018)	
DP20: Securing Infrastructure. This policy requires development to be provided with necessary	Additional transport infrastructure is limited to the provision of a number of mostly temporary construction accesses along the Rampion 2

Policy description	Relevance to assessment
infrastructure such as efficient and sustainable transport networks.	onshore temporary cable corridor. Accesses will be removed where appropriate and where agreed with landowners and the land reinstated when the Rampion 2 onshore cable construction is finished. Where accesses are not removed, they will remain in-situ, for example, the access to the onshore landfall site and onshore substation. The **Outline CTMP** (Document Reference: 7.6) outlines further details on access.
DP21: Transport. This policy requires developments, depending on their size or impact to prepare a Transport Statement or Transport Assessment to be submitted with the planning application. The policy also requires submission of a travel plan statement or full travel plan alongside the transport statement or transport assessment which will be submitted with the planning application.	This TGTN is provided as part of the DCO Application. The assessment presented is a link based environmental assessment and is supported by the **Outline CTMP** (Document Reference: 7.6), **Outline PRoWMP** (Document Reference: 7.8) and **Appendix 23.1: Abnormal Indivisible Load assessment** of the ES (Document Reference: 6.2.23.1). Outline documents were presented at PEIR stage and further discussions with relevant highways authority have been undertaken to define if there is a significant effect or not.
DP22: Rights of Way and other Recreational Routes. This policy aims to protect existing rights of way, cycle and recreational routes from any adverse effects that might come from development. It also states that where a route is likely to be affected an alternative must be provided which is equivalent in value to the route affected.	The protection of PRoWs, including recreational routes and National Trails has been included within the **Outline PRoWMP** (Document Reference: 7.8).
Worthing Local Plan 2020 – 2036 (Worthing Borough Council, 2023)	
DM15 Sustainable Transport and Active Travel. The policy sets out that Worthing Borough Council will support development which encourages use of public and sustainable transport and reduces the number of car journeys. Where development is likely to generate demand for travel or have other implications it is required to be supported by a Transport Statement	**Chapter 23: Transport, Volume 2** of the ES (Document Reference: 6.2.23) and the **Outline CTMP** (Document Reference: 7.6) outline the proposed HGV access strategy and environmental measures and routes that have been applied to mitigate impacts of the construction phase of the Proposed Development.

Policy description	Relevance to assessment
or Assessment and a sustainable travel plan. The policy further states that it will "*support measures that promote improved accessibility, create safer roads, reduce the environmental impact of traffic movements, enhance the pedestrian environment, or facilitate highway improvements*". In particular reference is made to managing the impact of HGV movements and implementing measures where this may be appropriate.	
West Sussex Walking and Cycling 2016 – 2026 (West Sussex County Council, 2020a)	
The West Sussex Walking and Cycling strategy is a document that sets out the aims and objectives for walking and cycling during the strategy period (2016-2026) and sets out guidance and information for developers.	The **Outline PRoWMP** (Document Reference: 7.8), outlines all PRoW impacts and environmental measures proposed.

2.3 Other relevant information and guidance

The Strategic Road Network and the Delivery of Sustainable Development Guidance

2.3.1 The Department for Transport (DfT) (2022) Circular 012022 '*The Strategic Road Network and the Delivery of Sustainable Development*' outlines the methods in which the National Highways (NH) (formally National Highways) will engage with developers and communities to deliver sustainable development and consequently economic growth, whilst safeguarding the primary function and purpose of the Strategic Road Network (SRN).

2.3.2 Paragraph 55 outlines under 'Environmental assessments':

"The company will engage in the relevant screening or scoping process where a potential impact on the SRN is identified. Environmental assessments must be comprehensive enough to establish the likely impacts on air quality, light pollution and noise arising from traffic generated by a development, along with the impacts from any proposed works to the SRN and identify measures to mitigate these impacts. Requirements and advice for undertaking environmental assessments in respect of transport impacts can be found in the DMRB."

2.3.3 Paragraph 65 to 69 outlines access requirements relating to on-shore wind turbines:

"The promoter of a wind turbine development must identify any impacts on the operation of the SRN from the construction, operation and de-commissioning stages and identify measures to mitigate these impacts. Swept path analyses must be provided for any abnormal load deliveries to the site via the SRN.

Access to the site for construction, maintenance and de-commissioning should be obtained from the local road network. A direct connection to the SRN will only be permitted in exceptional circumstances."

2.3.4 Within the transport Study Area (outlined in **Figure 7.6.3** in the **Outline Construction Traffic Management Plan (CTMP)** (Document Reference: 7.6), the SRN managed by NH includes the A27 and A23. The requirements of Circular 01/2022 are therefore addressed further within this TGTN.

© WSP Environment & Infrastructure Solutions UK Limited

Page intentionally blank

© WSP Environment & Infrastructure Solutions UK Limited

3. Existing Transport Network

3.1 Study Area 1 – onshore

3.1.1 This Section provides a description of the baseline conditions of the local and strategic roads which are proposed to be used for access to the onshore elements of the Proposed Development as well as the local PRoW, cycle routes and sustainable travel routes. **Figure 23.1, Volume 3** of the ES (Document Reference: 6.3.23) identifies the roads that have been included in this section.

3.1.2 **Table 3-1** sets out a high-level review of the Main "A" and "B" Roads included within Study Area 1 and more details on these are presented in the following section.

Table 3-1 A/B roads within Study Area 1

Type of road	Road name
A Roads	A259, A284, A27, A24, A284, A283, A281, A272, A23
B Roads	B2139, B2135, B2116, B2118

Strategic Road Network

A23

3.1.3 The A23 routes from the M23 south of Crawley to the A27 on the northern periphery of Brighton. For much of its length, the A23 is a dual carriageway subject to the national speed limit[1]. Within Study Area 1, the A23 has junctions with two major roads, the A272 and the A27 as follows:

- the junction with the A272 is located east of Bolney and comprises grade separated roundabout junctions located either side of the A23 alignment which connect to the A23 with on/off slips; and
- the junction with the A27 is located on the northern periphery of Brighton and comprises a grade separated bell junction with on/off slips which connects to a separate roundabout junction with the A23.

A27

3.1.4 The section of the A27 that is managed by National Highways (NH) routes between Pevensey in East Sussex to Cosham, Portsmouth where the A27 becomes the M27. The A27 connects numerous coastal towns along the south coast as well as connecting the cities of Portsmouth and Brighton. Road design

[1] 70mph for cars and motorcycles, 60mph for all other vehicles

standards vary along the A27, however, for most of its length the A27 is a dual carriageway subject to the national speed limit.

Local Highway Network

A24

3.1.5 The A24 routes between Worthing on the south coast and London, and routes via towns including Horsham and Leatherhead. Within Study Area 1, the A24 routes through both urban and rural settings. In rural areas the A24 is typically a dual carriageway and is subject to the national speed limit. In urban areas the A24 routes through both residential and commercial areas, and numerous residential and commercial properties front onto the road and there are a number of pedestrian crossing points.

A272

3.1.6 Within Study Area 1, the A272 routes east/west between the A24 and the A23. The A272 intersects the A24 via a staggered crossroad and junctions with the A23 are via two grade separated roundabouts which connect to the A23 by on/off slips. The A272 is a predominantly a single carriageway rural road throughout Study Area 1. The speed limit varies between national speed limit (60mph for cars and motorcycles) and 50mph depending on local constraints. A section of the A272 through Cowfold is subject to a 30mph speed limit as the road passes through a village setting. Pedestrian footways are provided, and residential properties front onto the A272 throughout Cowfold.

A2037

3.1.7 The A2037 routes north / south between the A283 and the A281. The road intersects with the A281 at a roundabout in the south of Henfield. The A2037 is a predominantly single lane, two-way carriageway rural through road and is subject to the national speed limit. It intersects with the A283 at a roundabout, south of Steyning. The road has limited pedestrian footways including through Henfield and Oreham Common, where some residential properties front onto the road. There is very limited pedestrian crossing points.

A280 Long Furlong

3.1.8 The A280 Long Furlong provides a connection between the A24 at Findon and the A27 south of the village of Clapham. The A280 is a single carriageway road which is predominantly subject to the national speed limit through a rural setting. A small section of the A280 through Clapham Village is subject to a 40mph speed limit, and a signal controlled crossing is provided adjacent to the local primary school.

A281

3.1.9 The A281 routes between Guildford and the A23 north of Brighton, the road connects multiple towns and villages along its routes including Horsham and Cowfold. Due to the length of the A281 and the numerous settlements that it

passes through the road conditions vary throughout. The A281 within Study Area 1 includes a section from Cowfold via Shermanbury to the A281 junction with the B2116. The A281 through this section is a single carriageway road where the speed limit and other conditions vary depending on location.

3.1.10 Through Cowfold the A281 routes through the centre of the village where commercial properties front onto the road. Pedestrian footways are located on either side of the carriageway within Cowfold centre and on at least one side of the carriageway through the rest of the village. The road is subject to a 30mph speed limit. The A281 connects with the A272 at two mini roundabout junctions within Cowfold centre and a signal controlled pedestrian crossing is provided.

3.1.11 Through Shermanbury, the A281 is subject to a 40mph speed limit, and a pedestrian footway is provided on the eastern side of the carriageway. Residential properties/driveways front onto the A281.

3.1.12 Between Cowfold and Shermanbury the A281 is rural in nature, no pedestrian infrastructure is provided, and the national speed limit for a single carriageway.

3.1.13 The section of the A281 from Henfield to the junction with the B2117 routes through the small village of Woodmancote. The A281 is 30mph though Henfield, and then 40mph past Woodmancote before changing to a national speed for the rest of the route.

A283

3.1.14 The A283 provides a connection between the A24 at Washington, West Sussex and the A27 at Shoreham-by-Sea. The A283 is a single carriageway which is subject to 50mph and national speed limits at various points along its route. The A283 passes predominantly through rural areas. In Steyning, the A283 is located largely in a cutting with local roads on overbridges. The A283 joins with the A27 via a grade separated roundabout and on-off slips.

A284

3.1.15 The A284 routes between Littlehampton and the A29 west of the village of Houghton. The A281 exists in two sections, from Littlehampton to a junction with the A27 at Crossbush and from a junction with the A27 in Arundel to the A29.

3.1.16 The section of the A284 from the A259 in Littlehampton to the A27 at Crossbush is within Study Area 1. This section of the A284 passes through the village of Lyminster and the residential suburb of Wick. In Wick, the A284 routes through a residential area where streetlighting and footways are provided, and residential properties and driveways front onto the A284. The road is subject to a 30mph speed limit.

3.1.17 In Lyminster Village, the road is subject to a 30mph speed limit. Pedestrian footways exist throughout the village on at least one side of the carriageway and a small number of residential properties/driveways front onto the A284. North of Lyminster Village, the speed limit increases to 40mph, and a pedestrian footway continues on the western side of the carriageway.

3.1.18 The construction of the Lyminster Bypass, which is expected to be officially designated as the A284 upon completion, will be a significant development in the road infrastructure. The Lyminster Bypass will serve to reduce the volume of traffic passing through Lyminster and reduce the impacts on local receptors arising as a result.

A259

3.1.19 The A259 routes along the south coast of England between Havant in Hampshire and Folkestone in Kent. Within Study Area 1, the A259 travels between a roundabout junction with Ford Lane at Climping to a roundabout junction with the B2187 at Toddington.

3.1.20 Between Climping and the junction with the B2187 at Littlehampton (Bridge Road roundabout), the road is a single carriageway which is subject to a 40mph speed limit west of the Ferry Road junction and the national speed limit east of the junction. A shared footway/cycleway is provided on the northern side of the carriageway.

3.1.21 Between Bridge Road roundabout and the junction with the A284 (Wick roundabout), the road is subject to the national speed limit and a shared cycleway/footway exists on the northern side of the carriageway between the signal controlled junction with Benjamin Grays Drive and the priority junction with New Courtwick Lane. Between Wick roundabout and the roundabout junction with the B2187 at Toddington the speed limit is reduced to 40mph, and pedestrian footways exist on both sides of the carriageway. Residential properties front onto the carriageway through this section.

B2116

3.1.22 The B2116 routes between the A281 north of Henfield to the B2118 at Aldbourne. The B2116 is a single carriageway which predominantly passes through a rural area. The speed limit varies between 30mph, 40mph and the national speed limit along the B2118 depending on local constraints. Throughout Aldbourne, the road is subject to a 30mph speed limit and pedestrian footways are provided and residential properties/driveways front onto the road.

B2117

3.1.23 The B2117 is a single carriageway road which passes between the A281 and Hurstpierpoint village. Within the short section of the road included in Study Area 1, the road joins the B2118 at a priority junction and the A23 at two priority junctions which serve as southbound on and northbound off slips to the grade separated A23. The B2117 is rural in nature between these junctions and is subject to the national speed limit.

B2118

3.1.24 The B2118 routes between the B2117 at Muddleswood and the A23 north of Sayers Common. The B2118 is a single carriageway and is subject to the national speed limit for much of its route.

3.1.25 Through the village of Aldbourne, the road is subject to a 40mph speed limit. A pedestrian footway is provided on the eastern side of the carriageway and residential properties/driveways front onto the road.

3.1.26 Through the village of Sayers Common, the B2118 is subject to a 30mph speed limit and pedestrian footways are provided on both sides of the carriageway. Residential properties/driveways front onto the B2118 and there is a mini-roundabout junction with Reeds Lane in the centre of the village.

B2135

3.1.27 The B2135 is a rural B-road serving the village of Partridge Green in Sussex. It is subject to the national speed limit for most of its route. It starts on the A283 at the northern end of the Steyning bypass. It heads north and, although quite wide the route is windy before straightening out, before entering the small village of Ashurst. Through the village of Ashurst the road is subject to a 30mph speed limit. The road then heads into Partridge Green (also 30mph speed limit) where it meets the B2116, and continues through the village, after which it turns north-west towards the A24.

B2139

3.1.28 The B2139 is a rural B-road which runs through Houghton, Amberly and Storrington in West Sussex. Much of the route is subject to the national speed limit, although Houghton and Storrington have a 30mph limit and Amberly is subject to a 40mph speed limit. The B2139 begins at Whiteways Lodge Roundabout with the A29 and the A284, and then runs northeast until Storrington, where it meets Pulborough Road (A283). The road is crossed by no other major roads, only residential streets when routing through villages. It is also the only access to Amberly Train Station.

Ferry Road

3.1.29 Ferry Road is a single carriageway road which routes between the A259 and the River Arun in Littlehampton. From a priority junction with the A259, the road routes through a rural area where a national speed limit applies, and narrow pedestrian footway is provided on the northern side. The road provides access to the Marina, Mobile Home Park and some other industrial buildings. Ferry Road is also the National Cycle Network Route 2 (NCN 2) providing access to Littlehampton station via the Littlehampton Harbour Bridge.

Ford Road

3.1.30 Ford Road is a single carriageway road which routes between the A27 in Arundel and Church Lane in Climping. From a roundabout junction with the A27 to the edge of Arundel, the road passes through a residential area where a 30mph speed limit applies and pedestrian footways are provided. South of Arundel the road is rural in nature and the national speed limit applies. Adjacent to Ford station, Ford Road crosses a railway line at a level crossing. North of the level crossing a 40mph speed limit is applied to Ford Road which continues for its remaining route to Church Lane in Climping. Between Ford Station and Climping a pedestrian footway exists on the western side of the carriageway.

Church Lane

3.1.31 Church Lane is a single carriageway road which routes between Ford Road in Climping to a roundabout junction with the A259 south of Climping. The road is subject to a 40mph speed limit, and a pedestrian footway is provided on the eastern side of the carriageway. A small number of residential properties front onto Church Lane in Climping.

Water Lane

3.1.32 Water Lane is single carriageway rural road which routes between the A283 and Hole Street in Winston. Water Lane is subject to the national speed limit between the junction with the A283 and the periphery of Winston Village. In Winston Village, Water Lane is subject to a 40mph speed limit, and a pedestrian footway is provided on the western side of the carriageway.

Kent Street

3.1.33 Kent Street is a single carriageway rural road which passes between the A272 and Wineham Lane and is subject to the national speed limit. There are no pedestrian footways on this rural road.

Wineham Lane

3.1.34 Wineham Lane is a single carriageway rural road which connects the village of Wineham to the A272 to the north and the B2116 to the south. Wineham Lane is subject to the national speed limit for all sections outside Wineham. Throughout Wineham, it is subject to a 40mph speed limit and residential/rural properties and driveways front onto the road.

Michelgrove Lane

3.1.35 Michelgrove Lane is a single carriageway rural road which provides access to a few residential properties. Michelgrove Lane is subject to the national speed limit, albeit this would be difficult to achieve given the nature of the road.

Baseline traffic flows

3.1.36 It has been agreed with WSCC highways officers that baseline traffic flows can be derived from existing traffic counts, most of which are taken from either permanent count locations maintained by WSCC/DfT or one-off counts within the WSCC (2020b) online traffic count database. For most locations, this has resulted in the use of data from 2019.

3.1.37 Following this approach resulted in a lack of traffic data for one specific location (Ferry Road – Highways Link 1) and also included data from pre-2010 for four other locations - Crossbush Lane (Highways Link 10), A280 Long Furlong (Highways Link 15), A283 East of Washington (Highways Link 17) and B2188 Sayers Common (Highways Link 29). The absence of current traffic data for these locations made it difficult to determine the baseline conditions. Therefore the assessment was informed by new traffic counts undertaken in mid-2022 at these five locations and as such were available for use in this TGTN.

3.1.38 In locations where the available traffic data is older than 2022, it was agreed with WSCC that no additional traffic counts were required to be undertaken as the counts from 2017-2019 were considered to still be representative, given the low level of additional traffic forecast in comparison to existing flows on the roads as indicated by the previous counts.

3.1.39 In agreement with WSCC, growth rates have been derived from the DfT's TEMPro 7.2. Growth rates for HGVs have been derived from the DfT (2020) National Traffic Statistics. A base year of 2021 has been used to growth up the available data for the baseline traffic counts.

3.1.40 Growth rates from TEMPro have been based on two areas: Arun for the south west sections (code, E41000245) and Horsham for the remainder of Study Area 1 (code E41000248).

3.1.41 The TEMPro growth rates are as follows:

- 2012 – 2021 – Arun – 1.1387 – Horsham – 1.1468;
- 2013 – 2021 – Arun – 1.1232 – Horsham – 1.1292;
- 2017 - 2021 – Arun – 1.0607 – Horsham – 1.0608;
- 2018 - 2021 - Arun – 1.0454 – Horsham – 1.0454; and
- 2019 – 2021 – Arun – 1.0305 – Horsham – 1.0306.

3.1.42 HGV growth has been based on the DfT (2021) publication *'TRA2501c - Road traffic (vehicle miles) by vehicle type in Great Britain'.* Table TRA2501c presents national data of the yearly change in vehicle traffic for total vehicles, car, light commercial vehicles and HGVs.

3.1.43 Based on Table TRA2501c, annual growth factors for HGVs have been derived as follows:

- the changes in HGV traffic flows between 2019 (last reliable year of data due to the COVID-19 pandemic) and the base year of 2021 has been calculated;
- the growth factor from 2018 to 2019 was 0.38%;
- estimated growth between 2019 and 2021 is assumed as 0.38% per annum, or 0.76% over the two years; and
- the growth for 2019 – 2021 (0.76% has been added to the growth from the historic count year to 2019 to provide for a growth from historic count year to 2021).

3.1.44 It should be noted the traffic count for A283 (East of A24) is dated 2005. As TEMPro does not extend as far back as 2005, an alternative method based on the DfT statistics has been used as discussed and agreed with WSCC.

3.1.45 The calculations above presented the following growth rates for HGVs:

- 2005 – 2021 - 0.9755;
- 2012 – 2021 – 1.0778;
- 2013 – 2021 – 1.10180;

- 2017 – 2021 - 1.0270;
- 2018 – 2021 - 1.0160; and
- 2019 – 2021 – 1.00750.

3.1.46 For locations where total vehicle traffic data was extracted from existing counts, but where there were no HGV breakdowns in these counts, an HGV percentage was required to develop an HGV traffic flow at these locations. There were three locations where this was required;

- Highways Link 10 – Crossbush Lane;
- Highways Link 17 – A283 East of A24; and
- Highways Link 29 – B2188, Sayers Common.

3.1.47 At all three of these locations, the historic traffic data only present a breakdown of total vehicles. To estimate a likely HGV percentage on these highways links, reference has been made to adjacent historic traffic counts as follows:

- Highways Link 10 – Crossbush Lane – 2% HGVs based on Highways Link 8 data;
- Highways Link 17 – A283 East of A24 – 3.4% HGVs based on Highways Link 16 data; and
- Highways Link 29 – B2188, Sayers Common – 4.7% HGVs based on Highways Link 32 data.

3.1.48 **Table 3-2** sets out the average annual weekday flow (AADF) for the date of survey and the baseline (2021). Figure 32.2 of **Chapter 32: ES Addendum** of the ES (Document Reference: 6.2.32) shows the location of each of these links in relation to their identified receptor.

Table 3-2 2021 baseline traffic data (AADF) – Study Area 1

Highways Link	Historic Traffic Data			2021 Base		
	Total Vehicles	HGVs	Year of Data	Total Vehicles	HGVs	HGV%
1	1925	314	2022	1925	314	16.3%
2	9859	1106	2019	10458	1135	10.9%
3	6025	253	2019	6209	255	4.1%
4	23618	1302	2019	24338	1312	5.4%
5	22400	857	2019	23083	863	3.7%
6	13248	551	2019	13652	555	4.1%

Highways Link	Historic Traffic Data			2021 Base		
	Total Vehicles	HGVs	Year of Data	Total Vehicles	HGVs	HGV%
7	13546	692	2018	13959	698	5.0%
8*	619	12	2019	647	12	1.9%
9	32734	1613	2013	33732	1625	4.8%
10*	736	15	2019	827	16	2.0%
11	31936	1757	2019	32910	1770	5.4%
12	22776	923	2019	23473	930	4.0%
13	30777	1012	2018	31719	1020	3.2%
14	25731	627	2017	26899	637	2.4%
15	16300	949	2019	17291	975	5.6%
16	18580	3653	2022	18580	3653	19.7%
17	21977	750	2005	22649	755	3.3%
18	5001	170	2019	5861	166	2.8%
19	11430	2326	2022	11430	2326	20.3%
20	3444	105	2019	3550	106	3.0%
21	20485	585	2019	21112	589	2.8%
22	35481	1636	2019	36567	1648	4.5%
23	6374	362	2018	6569	364	5.5%
24	7739	341	2019	8090	346	4.3%
25	6081	141	2019	6267	142	2.3%
26	22389	991	2019	23074	998	4.3%
27	16904	745	2019	17421	751	4.3%

Highways Link	Historic Traffic Data			2021 Base		
	Total Vehicles	HGVs	Year of Data	Total Vehicles	HGVs	HGV%
28	853	16	2019	879	16	1.8%
29	16889	724	2019	17406	729	4.2%
30	71894	4024	2012	74094	4054	5.5%
31	6227	293	2019	7141	315	4.4%
32	7356	1497	2022	7356	1497	20.4%
33	3147	149	2019	3243	150	4.6%
34	78611	3118	2019	81016	3141	3.9%
35	65068	2421	2019	67059	2439	3.6%

*Highway Link 8 and 10 will not be used by construction traffic associated with the Proposed Development.

3.1.49 For locations where total vehicle data was extracted from existing counts undertaken in 2022, it has been assumed that traffic levels have remained unchanged from 2021. The growth rate between 2021 and 2022 is negligible, and in 2021 traffic flows were also still being affected by COVID-19 pandemic. Consequently the 2022 survey results for the highway links in **Table 3-3** were also assumed to be a reasonable proxy for 2021 baseline in **Table 3-2**.

3.1.50 **Table 3-3** sets out the Annual Average Traffic Flows (AATF) for the locations that were surveyed in 2022 since the original PEIR was published.

Table 3-3 Baseline data – 2022 Traffic survey

Highways Link	Light Vehicles (LVs)	Heavy Goods Vehicles (HGVs)	Total Vehicles
1 – Ferry Road	1611	314	1925
15 – A280 Long Furlong	14927	3653	18580
17 – A283 East of the A24	9104	2326	11430
29 – B2188 Sayers Common	5859	1497	7356

3.1.51 The following baseline traffic flows have been included in **Table 3-4** below for the new receptor locations. Figure 32.2 of **Chapter 32: ES Addendum** of the ES (Document Reference: 6.2.32) shows the location of each of these links in relation to their identified receptor.

Table 3-4 Baseline traffic data for the new receptors (AADF)

Highways Link		Historical Traffic Data			2021 Base		
		Total Vehicles	HGVs	Year of Data	Total Vehicles	HGVs	% HGVs
A	B2139, Coolham Road	8918	422	2012	10227	454	4.4%
B	A272, West Chiltington Lane, Pound Lane, Shipley Road	8918	422	2012	10227	454	4.4%
C	A272, Cowfold Road	16904	745	2019	17421	751	4.3%
D	B2135, Steyning Road, East of Park Lane	4525	20	2017	4800	21	0.4%
E	A272, Bolney Road, East of A281, North of Oakfield Road	19786	668	2023	N/A	N/A	N/A
F	A272, Cowfold Road West of the A23	16889	724	2019	17406	729	4.2%

© WSP Environment & Infrastructure Solutions UK Limited

Highways Link		Historical Traffic Data			2021 Base		
		Total Vehicles	HGVs	Year of Data	Total Vehicles	HGVs	% HGVs
G	A281, North of Woodside Close	6081	141	2019	6267	142	2.3%
H	B2135 / B2116 High Street, Partridge Green	6374	362	2019	6569	364	5.5%
I	A281, Brighton Road, North of Partridge Green Road	7739	341	2018	8090	346	4.3%
J	Wineham Lane	853	16	2019	879	16	1.8%
K	B2118, East of B2116 Henfield Road	3147	149	2019	3243	150	4.6%
L	B2135, North of Spithandle Lane	3444	105	2019	3550	106	3.0%
M	A281, High Steet, Henfield	7739	341	2018	8090	346	4.3%
N	A281, Brighton Road	4963	72	2023	N/A	N/A	N/A

© WSP Environment & Infrastructure Solutions UK Limited

Highways Link		Historical Traffic Data			2021 Base		
		Total Vehicles	HGVs	Year of Data	Total Vehicles	HGVs	% HGVs
O	A283 Storrington Road, Northeast of Sullington Lane	21977	750	2019	22649	755	3.3%
P	Michelgrove Lane*	10	1	N/A	N/A	N/A	N/A
Q	A284, Lyminster Road	13546	692	2019	13959	698	5.0%
R	Church Lane, North of the A259	9859	1106	2017	10458	1135	10.9%
S	Ford Road, Station Road	6025	253	2019	6209	255	4.1%
T	Ford Road	6025	253	2019	6209	255	4.1%
U	Kent Street*	100	10	N/A	N/A	N/A	N/A

*Traffic flows on Michelgrove Lane (receptor P) and Kent Street (receptor U) have been estimated from on-site observations due to traffic survey data being unavailable.

3.2 Study Area 2 – onshore impacts of offshore works

3.2.1 This section provides a description of the baseline conditions of the local and strategic roads which are proposed to be used for access to the onshore elements of the offshore operation and maintenance phase (access to Port of Newhaven) of the Proposed Development. **Figure 23.6, Volume 3** of the ES (Document Reference: 6.3.23) identifies the roads that have been included in this section.

3.2.2 **Table 3-5** sets out a high-level review of the main “A” and “B” Roads included within Study Area 2 and more details on these are presented in the following section.

Table 3-5 A/B Roads within Study Area 2

Type of Road	Road Name
A Roads	A27, A26, A259
B Roads	B2109

Strategic Road Network

A27

3.2.3 The section of the A27 that is managed by National Highways (NH) routes between Pevensey in East Sussex to Cosham, Portsmouth where the A27 becomes the M27. The A27 connects numerous coastal towns along the south coast as well as connecting the cities of Portsmouth and Brighton. Road design standards vary along the A27, however, for most of its length the A27 is a dual carriageway subject to the national speed limit. Within Study Area 2, the junction with the A26 is located at Beddingham.

Local Highway Network

Beach Road / Clifton Road / Railway Road

3.2.4 Beach Road / Clifton Road / Railway Road is a two lane single carriageway urban road which connects the East Quay of Newhaven Port to the A26/B2109. The road is subject to a 30mph speed limit. In the southern section (Beach Road) the route is industrial in nature but passes through residential areas on the Clifton Road and Railway Road section. The route has footways on both sides and is provided with streetlights.

B2109

3.2.5 The B2109 is a two-lane single carriageway that runs from the A26 south to join the A259, then parallel to the A259, and then south from the A259 west of the overpass near Newhaven Town rail station. In Study Area 2, the B2109 runs between the two junctions at either side of the A259 overpass and is provided with footways, pedestrian crossings (under signal control) and streetlights. The B2109 is subject to a 30mph speed limit. The B2109 also has an at grade signalled rail level crossing to the west of the junction with Railway Road.

A259

3.2.6 The A259 routes along the south coast of England between Havant in Hampshire and Folkestone in Kent. Within Study Area 2, the A259 routes Newhaven Town Centre and a junction with McKinley Way.

3.2.7 In Study Area 2, the A259 is a two lane single carriageway which for the most part is a flyover between McKinley Way and Newhaven Town Centre. The A259 is

subject to a 30mph speed limit and has footways either side of road apart from the flyover section. The A259 also has streetlights and west of the flyover section has a signal-controlled crossing of the River Ouse to accommodate the swing bridge operation.

A26

3.2.8 The A26 is a two lane single carriageway in Study Area 2 that links Newhaven to Kent and is a primary route in the south east of England.

3.2.9 In Study Area 2, the A26 links to the B2109/A259 in Newhaven and routes north to a roundabout junction with the A27 at Beddingham. The road is subject to the national speed limit (NSL) outside of settlements but reduces to 40mph in South Heighton and 30mph in Newhaven. The A26 has footways and streetlights in the major settlements but is not provided with footways in the rural sections.

McKinley Way (Newhaven Port New Access Road)

3.2.10 McKinley Way is a 1.4km two lane single carriageway which runs from a roundabout junction with the A259, via a new intermediate roundabout, to a new roundabout providing access to Newhaven East Quay. The road has footways as well as a segregated cycle track, and the southern end of the road includes a bridge spanning the Newhaven to Seaford railway line and Mill Creek. McKinley Way is subject to a 30mph speed limit.

Baseline traffic flows

3.2.11 The approach to the collation of baseline traffic for Study Area 2 is the same as Study Area 1 and historic traffic data has been used, derived from the DfT traffic data.

3.2.12 Growth rates for total vehicles have been derived from the DfT's TEMPro 7.2. A base year of 2021 has been used to growth up to for the baseline traffic counts. Growth rates from TEMPro have been based on TEMPro rates for Lewes 008/009 within the database which covers the town of Newhaven. The TEMPro growth rates are as follows:

- 2018 - 2021 - Newhaven – 1.93.

3.2.13 HGV growth has been based on the DfT (2021) publication *'TRA2501c - Road traffic (vehicle miles) by vehicle type in Great Britain'.* Table TRA2501c presents national data on the yearly change in vehicle traffic for total vehicles, car, light commercial vehicles and HGVs.

3.2.14 Based on Table TRA2501c, annual growth factors for HGVs have been derived as follows:

- the change in HGV traffic flows between 2019 (last reliable year of data due to the COVID-19 pandemic) and the base year of 2021 has been calculated;
- the growth factor for from 2018 to 2019 was 0.38%;
- estimated growth between 2019 and 2021 is assumed as 0.38% per annum, or 0.76% over the two years; and

- the growth for 2019 – 2021 (0.76% has been added to the growth from the historic count year to 2019 to provide for a growth from historic count year to 2021).

3.2.15 The calculations above presented the following growth rates for HGVs:

- 2019 – 2021 – 1.00750

3.2.16 Due to the Newhaven Port New Access Road not yet having been opened to traffic at the time of 2019 data collection (factored up to 2021), an assumption has been made for the percentage transfer of existing traffic to Newhaven Port East Quay which currently routes along Railway Road / Clifton Road and would move onto the New Access Road. For completion of a robust assessment, it is assumed that 80% of the currently average daily traffic on the existing Railway Road / Clifton Road route will reassign to the New Port Access Road.

3.2.17 **Table 3-6** sets out the AADF for 2019 and the current baseline (2021). 2021 base traffic includes for the transfer of 80% of the traffic from the existing access to Newhaven Port corridor; as described above.

Table 3-6 2021 baseline traffic data (AADF) – Study Area 2

Highways Link	Historic Traffic Data			2021 Base		
	Total Vehicles	HGVs	Year of Data	Total Vehicles	HGVs	HGV%
1	N/A	N/A	N/A	2829	233	8.2%
2	16873	1267	2019	17346	1277	7.4%
3	16873	1267	2019	17346	1277	7.4%
4	36734	1921	2019	37781	1935	5.1%
5	26348	1095	2019	27106	1103	4.1%

Future baseline

Study Area 1 – Onshore works

Traffic growth

Construction impacts

3.2.18 To understand the transport effects during the construction phase, the traffic generation calculations were interrogated to identify a single peak week across the study area for all receptors on highways links, i.e. the week during the construction programme when the number of vehicle trips being generated is forecast to be highest.

3.2.19 It has been agreed with WSCC and NH that growth rates can be derived from TEMPro and there is no requirement to include committed development or Local Plan allocations as the growth within the TEMPro estimates will account for traffic growth related to future development in the area through Local Plan allocations.

3.2.20 Furthermore, the Department for Transport (DfT) has confirmed that the A27 Arundel Bypass scheme will be deferred to Road Investment Strategy (RIS3 covering 2025 to 2030) to allow time for stakeholders' views to be fully considered. Therefore, as the A27 Arundel Bypass is not yet committed, no cumulative effects assessment has been included with the Proposed Development.

3.2.21 The growth rates from TEMPro are as follows:

- 2021 – 2025 – Arun - 1.066 / Horsham – 1.069;
- 2021 – 2026 – Arun – 1.0746 / Horsham – 1.0788;
- 2021 – 2027 – Arun – 1.0831 / Horsham – 1.0868; and
- 2027 – 2028 – Arun – 1.092 / Horsham – 1.095.

3.2.22 The HGV growth rates derived from the DfT Transport Statistics are as follows:

- 2024 – 2025 – 1.062;
- 2021 – 2026 – 1.075;
- 2021 – 2027 – 1.093; and
- 2021 – 2028 – 1.109.

3.2.23 The following HGV growth rates have been applied to the base survey flows for the new receptor:

- 2012 – 2025 – 1.202;
- 2012 – 2026 – 1.217;
- 2017 – 2025 – 1.124;
- 2017 – 2026 – 1.1395;
- 2023 – 2025 – 1.031;
- 2023 – 2026 – 1.0465; and
- 2023 – 2027 – 1.062.

3.2.24 The resultant future year traffic generation is set out in Table 2-6 and Table 2-7 of **Chapter 32: ES Addendum** of the ES (Document Reference: 6.2.32).

Decommissioning impacts

3.2.25 The temporal scope of the assessment of the decommissioning phase is based on the peak period of traffic during the onshore substation removal. It is currently predicted that the onshore substation will be decommissioned around 30 years from the Proposed Development commission. The onshore substation is proposed to be built in year two to five of the construction programme. Based on the

assessments set out on this TGTN, year five will be 2030 and 30 years from then will be 2060.

3.2.26 It has been agreed with WSCC and NH that growth rates can be derived from TEMPro and there is no requirement to include committed development or Local Plan allocations as the growth within the TEMPro estimates will account for traffic growth related to future development in the area through Local Plan allocations. For the decommissioning phase impacts assessment, TEMPro rates have been extracted for Horsham.

3.2.27 TEMPro only provide traffic estimates to 2051 as this is the latest year for which a reliable traffic growth estimate can be made. Therefore, 2051 is used for the assessment for the decommissioning phase in this TGTN.

3.2.28 The growth rates from TEMPro are as follows:

- 2021 – 2051 – Horsham – 1.22.

3.2.29 The HGV growth rates derived from the DfT Transport Statistics based on the construction phase HGV growth methodology will result in HGV growth of 1.55% per year which over 30 years to 2051 will result an increase in HGVs of 46.50%. Although this almost doubling of HGVs in 30 years may not be reached (in recent years HGV growth has slowed) it has been used for calculations in this TGTN for consistency with other assessments.

- 2021 – 2051 – 1.4650.

3.2.30 The resultant future year traffic generation is set out in Table 2-6 and Table 2-7 of **Chapter 32: ES Addendum** of the ES (Document Reference: 6.2.32).

Future highways network changes (construction and decommissioning phases)

3.2.31 During initial consultation, WSCC confirmed that there are no highways schemes that will need to be considered in the assessment.

3.2.32 The A27 Arundel Bypass is being promoted by NH but is not a committed development. With no direct impacts of onshore elements of the Proposed Development across the proposed route of the A27 Arundel Bypass, the only effects of the onshore elements of the Proposed Development on the bypass will be the additional traffic generated during the construction phase. Highways Link 9 (As shown in **Figure 23.20, Volume 3** of the ES (Document Reference: 6.3.23) has been selected to provide NH with an indication of the peak construction traffic on the A27 which will switch to an open A27 Arundel Bypass. The Department for Transport has confirmed that the A27 Arundel Bypass scheme will be deferred to Road Investment Strategy (RIS3 (covering 2025 to 2030) to allow time for stakeholders' views to be fully considered. Therefore, as the A27 Arundel Bypass is not yet committed, it is not included within the cumulative effects assessment in **Chapter 23: Transport, Volume 2** of the ES **[APP-064]** or this TGTN, since it is not considered that the A27 Arundel Bypass would either be open or past its peak point of construction by the time that construction of the Proposed Development is complete.

3.2.33 The Lyminster Bypass construction works commenced on 24 October 2022 and the scheme completion is currently forecast for Autumn 2024. The bypass will link

to the existing A284 from a point approximately 600m south of the A27 at Crossbush and join the privately developed section of the same proposed bypass at Toddington Nurseries. The proposed bypass will be a 7.3m wide single dual carriageway with verge on one side and a shared footway/cycleway facility on the other. The footway/cycleway will connect to existing and proposed facilities along the southern half of the bypass and A259. The Lyminster Bypass is due to be completed ahead of the peak of any Rampion 2 construction works. In order to present a robust scenario, the Rampion 2 traffic modelling has assumed that no Rampion 2 construction traffic would use the Lyminster Bypass and would instead use the existing road network; in practice, the presence of the Lyminster Bypass would relieve pressure on the existing road network. The cumulative highways assessment therefore does not include the Lyminster Bypass, so as to provide a robust assessment.

3.2.34 West Sussex County Council (WSCC) is currently developing a major road enhancement scheme for the corridor of the A259 between Bognor Regis and Littlehampton in Arun District. The location of the scheme is between and including the B2132 Yapton Road (Comet Corner) junction and the B2187 Bridge Road (Tesco) junction. Construction commencement, subject to Full Business Case approval, is predicted to be the middle of 2025. As the scheme does not yet have a full Business Case it has not been included in the cumulative effects assessment in **Chapter 23: Transport, Volume 2** of the ES **[APP-064]** or this TGTN, however a sensitivity test could be undertaken if the A259 scheme were to get full business case approval.

Study Area 2 – Onshore impacts of offshore works

Traffic growth

3.2.35 Onshore impacts of the offshore operation and maintenance phase are proposed to start in the first year of commission. With the construction phase ending in 2029, a future year of assessment of 2030 for this operation and maintenance phase has been assumed for assessment in this TGTN.

3.2.36 It has been agreed with WSCC and NH that growth rates can be derived from TEMPro and there is no requirement to include committed development or Local Plan allocations as the growth within the TEMPro estimates will account for traffic growth related to future development in the area and it is proposed to continue that approach for Study Area 2. The growth rates are based on the Newhaven (TEMPro data set Lewes 008/009) location in TEMPro as that is where the candidate port is located.

3.2.37 The growth rates from TEMPro are as follows:

- 2021 – 2030 – 1.0746.

3.2.38 The HGV growth rates derived from the DfT Transport Statistics are as follows:

- 2021 – 2030 – 1.1395.

3.2.39 The resultant future year traffic generation is set out in Table 2-6 and Table 2-7 of **Chapter 32: ES Addendum** of the ES (Document Reference: 6.2.32).

4. Proposed Development

4.1 The onshore elements of the Proposed Development

4.1.1 The onshore elements of the Proposed Development will include the construction of a temporary onshore cable corridor from landfall at Climping to a new onshore substation at Oakendene near Cowfold, that will connect to the existing National Grid Bolney substation, Mid Sussex, via buried onshore cables.

Onshore cable corridor

4.1.2 The onshore cable corridor will cover an approximate distance of 38.8km and will be buried along its entire length. For construction purposes, a nominal working width up to 40m will be required for the majority of the onshore cable corridor, with some larger working areas required at key areas, while constraints may restrict the working width in other areas.

4.1.3 The onshore cable corridor commences at landfall in Climping, then crosses under the A259, rail network and River Arun via trenchless crossing before also crossing by trenchless method under the A27 near Hammerpot. From here, the onshore cable corridor will head northeast across the South Downs to Washington, West Sussex and under the A24 and A283 via a trenchless crossing. The onshore cable corridor continues northeast through a rural area and to the new onshore substation at Oakendene, that will connect to the existing National Grid Bolney substation via buried onshore cables. Additional infrastructure at the existing Bolney Substation is required to connect the Proposed Development to the National Grid electrical network.

4.1.4 The onshore cable corridor has numerous crossings of roads including the A259, A284, A27, A24, A283, Chanctonbury Ring Road, Spithandle Lane, B2135, B2116, A281, King's Lane, Kent Street, and Wineham Lane. There is also one crossing of the River Arun and two crossings of the National Rail network west of Littlehampton and Wick. Installation of the onshore cable will utilise trenchless crossing techniques (e.g. HDD) to avoid major roads at specific locations, operating railway lines and watercourses.

4.1.5 For the purpose of this assessment, the entire onshore cable corridor has been split into three sections which are described below and presented in **Figure 23.2, Volume 3** of **Chapter 23: Transport, Volume 2** of the ES **[APP-064].** Each of the sections contains a temporary construction compound (TCC) plus a number of construction accesses, and therefore enables the study area to be studied in greater detail.

- Section 1 runs north from landfall, across the A259, the River Arun and the two railway lines before crossing the A27 near the edge of the South Downs at Hammerpot. This section is rural but runs along the edge of the settlements of Littlehampton, Wick, Lyminster and Crossbush;
- Section 2 runs northeast from the Section 1 boundary to a crossing of the A24 near Washington, West Sussex. Between the A27 and A24, the onshore cable

corridor has minimal interaction with the local highways network and due to the nature of access options, will make use of a continuous temporary construction haul road; and

- Section 3 runs from the Section 2 boundary along the A283 corridor before turning northeast to Partridge Green and further east to Bolney. This section is flat and rural in character but with more crossings of roads.

4.1.6 The three sections of the onshore cable corridor route associated with each of the three TCC's assessed are presented in **Figure 23.2.1, Annex B**.

4.1.7 The onshore cable corridor was divided into three sections to define the number of work fronts required. The key onshore cable construction activities occur over a three year period. It is assumed that the construction crews will initially work on the southernmost section (Section 1) of the onshore cable corridor, moving on to Section 2 and then Section 3 as set out in **Figure 23.2.1, Annex B**. The sections are in turn broken down into smaller sections defined by access points and crossings.

4.1.8 Each of these sections is defined by the presence of a temporary construction compound, plus a number of construction accesses.

4.1.9 Temporary construction compounds (TCC's) will be required to store materials and plant as well as form a base for traffic working at the various site locations. The onshore part of the proposed DCO Order Limits allows space for five TCC locations as set out in **Figure 23.3a-c, Volume 3** of **Chapter 23: Transport, Volume 2** of the ES **[APP-064]**. The TCCs used in the traffic calculations used in this assessment are as follows:

- TCC 1 –Climping compound: Site Access A-5, serving Section 1;
- TCC 2 – Washington compound: Site Access A39, serving Section 2;
- TCC 3 – Oakendene west compound: Site Access A-62, serving Section 3;
- Construction compound 4 – Oakendene substation compound: Site Access A-63, serving Section 3; and
- Construction compound 5 – existing National Grid Bolney substation compound – Site Access A-68, serving Section 3

4.1.10 **Figure 23.4a-c, Volume 3** of the ES (Document Reference: 6.3.23) sets out the onshore cable corridor sections and the TCCs.

4.1.11 The operational lifetime of the Proposed Development is expected to be around 30 years and for the purposes of this TGTN at year 30 the Proposed Development will reach the decommissioning phase.

4.1.12 Taking place after construction and commissioning of the Proposed Development, the operation and maintenance phase activities can be divided into three main categories:

- scheduled maintenance;
- unscheduled maintenance; and
- special maintenance in the event of major equipment breakdown and repairs.

Construction phase working hours

4.1.13 Core working hours for construction of the onshore components will be 08:00 to 18:00 Monday to Friday, and 08:00 to 13:00 on Saturdays, apart from specific circumstances that are set out in the **Outline Code of Construction Practice (COCP) [PEPD-033]**, where extended and continuous periods of construction are required.

4.1.14 Prior to and following the core working hours Monday to Friday, a 'shoulder hour' for mobilisation and shut down will be applied (07:00 to 08:00 and 18:00 to 19:00). The activities permitted during the shoulder hours include staff arrivals and departures, briefings and toolbox talks, deliveries to site and unloading, and activities including site and safety inspections and plant maintenance. Such activities shall not include use of heavy plant or activity resulting in impacts, ground breaking or earthworks.

4.1.15 No activity outside these hours including Sundays, public holidays or bank holidays will take place apart from under the following circumstances:

- where continuous periods (up to 24 hours, 7 days per week) of construction work are required for HDD[2];
- for other works requiring extended working hours such as concrete pouring which will require the relevant planning authority to be notified at least 72 hours in advance;
- for the delivery of abnormal loads to the connection works, which may cause congestion on the local road network, and will require the relevant highway authority to be notified at least 72 hours in advance; or
- as otherwise agreed in writing with the relevant planning authority.

4.1.16 For the purposes of a robust assessment in this TGTN, traffic generation has only been calculated for a five day working week and with no Saturday working.

4.1.17 It is anticipated that heavy goods vehicles (HGVs) will be required during the enabling and construction phases of the Proposed Development.

Operation and maintenance phase

4.1.18 Following the construction phase, the operation and maintenance phase activities can be divided into three main categories:

- scheduled maintenance;
- unscheduled maintenance; and
- special maintenance in the event of major equipment breakdown and repairs.

4.1.19 A key principle is that the wind farm will be designed to operate under minimum supervisory input. Maintenance of the onshore cable is expected to be minimal. During the operation and maintenance phase, periodic testing of the cable is likely to be required (every two to five years). This will require access to the link boxes at

[2] HDD is a continuous activity and cannot be paused once started.

defined inspection points along the onshore cable corridor. This will involve attendance by up to three light vehicles, such as vans, in a day at any one location. The vehicles will gain access using existing field accesses and side accesses as agreed with landowners to reach the relevant sections of the onshore cable.

4.1.20 For the onshore cable, unscheduled maintenance or emergency repair visits will typically involve a very small number of vehicles, typically light vans. Infrequently, equipment may be required to be replaced, then the use of an occasional HGV may be utilised, depending on the nature of the repair.

4.1.21 Vehicle movements during operation and maintenance phase of the onshore substation will be small, comprising occasional inspection and maintenance requirements. Its considered this traffic will be negligible and there not been assessed.

4.1.22 The operational lifetime of the Proposed Development is expected to be around 30 years and for the purposes of this TGTN at year 30 the Proposed Development will reach the decommissioning phase.

Decommissioning phase

4.1.23 A decommissioning plan and programme will be developed prior to construction and updated during operation of the Proposed Development to account for any changes to decommissioning best-practice and developments in technology.

4.1.24 The decommissioning phase is anticipated to involve the removal of offshore infrastructure above the seabed, and the removal and reinstatement of the onshore substation site. The cable will be left in place to avoid disturbance. The decommissioning works are likely to be undertaken in reverse to the sequence of construction works and involve similar levels of equipment but much reduced numbers of vehicles for decommissioning.

4.2 The offshore elements of the Proposed Development

4.2.1 The key offshore elements of the Proposed Development will be as follows:

- up to 90 offshore wind turbine generators (WTGs) and associated foundations;
- blade tip of the WTGs will be up to 325m above Lowest Astronomical Tide (LAT) and will have a 22m minimum air gap above Mean High Water Springs (MHWS);
- inter-array cables connecting the WTGs to up to three offshore substations;
- up to two offshore interconnector export cables between the offshore substations;
- up to four offshore export cables each in its own trench, will be buried under the seabed within the final cable corridor; and
- the export cable circuits will be High Voltage Alternating Current (HVAC), with a voltage of up to 275kV.

Construction phase

4.2.2 During the construction phase, it is anticipated that 2,000+ two way movements for crew support vessels from the onshore ports to the offshore infrastructure, however it is not established how this will be organised.

4.2.3 The construction of the Rampion 1 project resulted in staff arriving and departing numerous ports in the UK and Europe and it is likely this process will be undertaken for Rampion 2.

4.2.4 A maximum of 6 crew transfer vessels (which can typically carry 12 to 16 passengers and equipment) is required with 180 return trips[3] (360 two-way movements) for all three offshore substations during the offshore substation vessel installation.

4.2.5 A maximum of 10 crew transfer vessels (which can typically carry 12 to 16 passengers and equipment) would be required with 1800 two-way movements for the smaller wind turbine generator type during the offshore installation.

4.2.6 Alternatively, a maximum of 6 crew transfer vessels (which can typically carry 12 to 16 passengers and equipment) would be required with 600 two-way movements for the larger wind turbine generator type during the offshore installation.

4.2.7 Material, including large transformers, cable and WTG components are expected to be delivered directly from European manufacturing bases. WTG construction vessels are also usually moored in European ports or will transfer from other projects.

4.2.8 There will also be some onshore works required in the offshore works but these construction activities (construction compound setup, HDD, Transition Joint Bay (TJB) construction etc.) have relatively short durations compared with the overall landfall construction presented in this TGTN for the construction phase of the landfall site (onshore). Due to the landfall works requiring offshore works, the scheduling of the landfall works will allow for flexibility around the offshore schedule and sufficient time for all onshore activities to be performed so as not to delay the offshore works.

4.2.9 Consequently, the onshore impacts of the offshore process (i.e. transferring construction workers to ports to connect to offshore transfers) would have a limited impact onshore compared to the movement of freight. Offshore construction worker movements have been considered as part of the onshore assessment.

Operation and maintenance phase

4.2.10 The operational lifetime of the Proposed Development is expected to be around 30 years and for the purposes of this TGTN at year 30 the Proposed Development will reach the decommissioning phase. It is only anticipated that elements of the Proposed Development that are above sea level will be removed (WTG / substations).

[3] One return trip comprises 2 two-way movements in total

4.2.11 When the offshore elements of the Proposed Development are constructed and commissioned staff will be required to continue to operate and maintain the WTGs and associated infrastructure. RED will draw on experience gained in operating and maintaining the existing Rampion 1 project and although the maintenance port and facilities are not yet confirmed, for the purpose of this TGTN it is assumed that the existing operation and maintenance base Newhaven East Quay will be used for staffing.

© WSP Environment & Infrastructure Solutions UK Limited

5. Key Construction Traffic Assumptions

5.1 Introduction

5.1.1 This Section provides a summary of key assumptions that have been used to calculate construction traffic generation across all elements of the of Proposed Development.

5.2 Overview

5.2.1 The construction works have been based on the following onshore cable connection design. A maximum of 20 buried cables will run along the length of the onshore cable route from the landfall at Climping through to the new onshore substation at Oakendene. A maximum of 10 buried cables will subsequently run from the new onshore substation to connect into the existing National Grid Bolney substation.

5.2.2 The up to 275kV cable system along the onshore cable route will comprise four cable circuits in separate trenches. Each circuit will contain three Power Cables (HVACs) and two Fibre Optic Cables (FOCs) drawn through pre-installed ducts.

5.2.3 The 400kV cable system between the new onshore substation at Oakendene and the existing National Grid Bolney substation will comprise two cable circuits in separate trenches. Each circuit will contain three Power Cables and two FOCs drawn through pre-installed ducts. In order to undertake calculations of vehicle movements associated with the construction phase of the onshore elements of the Proposed Development, a fixed scheme is required with regards to onshore cable corridor, onshore substation location and TCC locations. To inform these calculations, vehicle movements have been calculated for each construction site and key assumptions associated with these are discussed in the following subsections for:

- onshore cable corridor;
- TCCs;
- onshore substation; and
- temporary construction accesses.

5.3 Onshore cable corridor

5.3.1 The onshore cable corridor is routed from the landfall at Climping through to a proposed new onshore substation at Oakendene, and then onto the existing National Grid Bolney substation.

5.3.2 Temporary access points along the onshore cable route have been identified. These accesses may be utilised in different ways, due to safety and efficiency, for example traffic may enter and exit via different accesses whilst making deliveries

to site. For the purposes of this assessment, access to and from the onshore cable route is assumed through the access points as set out in Table 5-1.

Table 5-1 Accesses

Access	Access Type
A-01	Construction and operational
A-02	Light construction
A-03	Light construction
A-04	Operational
A-05	Construction and operational
A-06	Operational
A-08	Light construction
A-09	Construction and operational
A-10	Operational
A-11	Operational
A-12	Construction
A-13	Construction and operation
A-14	Light construction and operational
A-15	Construction and operational
A-16	Construction and operational
A-17	Operational
A-18	Operational
A-20	Light Construction
A-21	Construction
A-22	Construction
A-23	Operational
A-24	Light construction and operational
A-25	Light construction and operational
A-26	Construction and operational

Access	Access Type
A-27	Operational
A-28	Construction
A-29	Operational
A-30	Operational
A-31	Operational
A-32	Operational
A-33	Construction
A-34	Operational
A-35	Construction
A-36	Operational
A-37	Light construction
A-38	Light construction
A-39	Construction and operational
A-40	Construction and operational
A-41	Construction and operational
A-42	Construction and operational
A-43	Construction and operational
A-44	Operational
A-45	Operational
A-46	Light construction and operational
A-47	Construction and operational
A-48	Construction and operational
A-49	Light construction and operational
A-50	Construction and operational
A-51	Operational
A-52	Construction and operational

Access	Access Type
A-53	Construction
A-54	Operational
A-55	Operational
A-56	Construction and operational
A-57	Construction and operational
A-58	Operational
A-59	Operational
A-60	Operational
A-61	Construction and operational
A-62	Construction
A-63	Construction and operational
A-64	Construction and operational
A-65	Operational
A-66	Light construction and operational
A-67	Construction and operational
A-68	Construction
A-69	Operational

5.3.3 The temporary construction access points are required along the onshore cable corridor to allow the transportation of materials, equipment, and personnel to and from the construction sites. These temporary construction access points will allow access to the construction corridor where there will be a temporary construction haul road running along the length of the onshore cable route, except for locations where there are trenchless or road crossings. These accesses may be utilised in different ways, due to safety and efficiency, for example traffic may enter and exit via different accesses whilst making deliveries.

5.3.4 Potential temporary construction access points along the onshore cable corridor were identified based on suitability for the Proposed Development requirements. Existing access points and tracks have been utilised where possible. These temporary construction and operational accesses may be utilised in different ways due to safety and efficiency, for example construction traffic may use one access for incoming traffic to an onshore cable corridor section and another access for

traffic to exit. For the purposes of this assessment, access to and from the onshore cable corridor is assumed through the same access point.

5.3.5 The **Outline Construction Traffic Management Plan (CTMP) [PEPD-035a]** includes more detail on the temporary construction access points.

5.4 Temporary construction compounds

5.4.1 A number of TCCs will be required to support the construction of the onshore elements of the Proposed Development and will be used to store materials and form a base for traffic travelling to and from construction site locations. These TCCs are outlined in **Section 4.1**.

5.5 Onshore substation

5.5.1 The purpose of the new onshore substation at Oakendene is to increase the onshore cable route voltage from the export voltage to the 400kV required to connect to the existing National Grid Bolney substation.

5.5.2 Access to the onshore substation will be required during construction as well as operation and maintenance. The temporary construction access route will be used for the duration of the onshore substation construction works.

5.5.3 Temporary construction activities for the onshore substation will include enabling works and construction works. Enabling works will prepare the site ahead of construction and include vegetation clearance, access road construction, installation of drainage systems, stone fill, installation of a temporary construction compound, delivery of materials, plant, machinery and fuel, and any earthworks necessary for the installation of the substation foundations.

5.5.4 Generally, onshore substation construction will take place during daylight hours with a requirement only for local task lighting. Construction works will involve:

- landscaping;
- installation of perimeter fencing;
- ground preparation works;
- installation of underground services and onshore substation foundations;
- construction of the control and switchgear buildings and plant buildings;
- construction of cable trenches;
- construction of ducts and pits;
- construction of the oil containment bund; and
- provision of utility supplies.

5.5.5 Once all construction activities have been carried out, the electrical equipment will be installed, commissioned and tested for the performance of the connection between Oakendene and the existing National Grid Bolney substation. Finally, the site will be secured, and the temporary area returned to its original use and condition.

5.5.6 It is anticipated that heavy goods vehicles (HGVs) will be required during the enabling and construction phases of the development.

Abnormal Indivisible Loads (AILs)

5.5.7 It is anticipated that Abnormal indivisible load (AIL) movements are expected to be required during the construction phase to transport permanent plant and equipment to the site. The expected AIL movements are described in **Appendix 23.1: Abnormal Indivisible Loads assessment, Volume 4** of the of the ES **[APP-196].**

5.5.8 There will be up to 10 two-way movements delivering abnormal indivisible loads.

5.5.9 AILs will be comprised of:

- Up to four main transformers; and
- Six shunt reactors.

5.5.10 This figure reflects the update contained within the errata items included in Appendix 3 of the Applicant's cover level to the Pre-Examination Procedural Deadline (PEPD-001).

5.6 Work section breakdown

5.6.1 The three sections of the onshore cable corridor route associated with each of the three TCC's assessed is presented in **Figure 23.2.1, Annex B.**

5.6.2 The onshore cable corridor has been divided into sections to define the number of work fronts required. The key onshore cable construction activities occur over a three year period. It is assumed that the construction crews will initially work on the southernmost section (Section 1) of the onshore cable corridor, moving on to Section 2 and then Section 3 as set out in **Figure 23.2.1, Annex B.** The sections are in turn broken down into smaller sections defined by access points and crossings.

5.6.3 Each of these sections is defined by the presence of a Temporary Construction Compound (TCC), plus a number of construction accesses.

5.7 Construction activities

5.7.1 During the construction phase, construction activities have been divided into the following activities:

- horizontal directional drill (HDD) construction compound works;
- HDD drilling;
- TCC mobilisation;
- temporary compound construction;
- haul roads;
- landfall works;

- clearing works;
- temporary construction access works
- materials deliveries;
- trenching;
- all joint bay works;
- duct installation, cable pulling and reinstatement;
- temporary construction access road / haul road reinstatement;
- compound reinstatement; and
- onshore substation construction.

5.7.2 The construction traffic generation of all elements of the works has been predicted across the proposed construction schedule (2025-2030). This has resulted in vehicle movement predictions on a weekly basis per access point for each work site, split into Heavy Goods Vehicles (HGVs) and Light Goods Vehicles (LGVs).

5.8 Construction Management Base

5.8.1 During the construction phase, the onshore elements of the Proposed Development would be supported with Temporary Construction Compounds (TCC's) (and HDD compounds), accesses and haul roads. There will also be some traffic during the construction phase associated with the construction management base in Shoreham, from where crew transfer onto vessels.

5.8.2 A management team, marine co-ordination and vessel management team will be based in the office, and some contractors may use the office facility as well. These teams will comprise around 24 people in total and will be assumed to be shore-based for robustness.

5.8.3 The construction management base will enable Crew Transfer Vessels (CTV) to access the offshore construction location. The construction management base will also enable CTV crew transfers to complete construction and commissioning work.

5.8.4 The base will feature facilities including:

- Temporary modular offices, with welfare and changing facilities;
- Car parking; and
- Temporary pontoons with a fuelling facility.

5.8.5 It has been assumed that 40 workers per day will travel to the Construction Management Base (CMB) for onward transfer by CTV, and they have the same spatial distribution as workers based at TCC 1. The remainder of the LV traffic is assumed to be LGVs and similarly follows the spatial distribution for TCC 1 deliveries. There are also some HGVs serving the base, and it is assumed that the HGV distribution is followed with respect to these.

5.9 Scheduling

5.9.1 An indicative construction programme for the Proposed Development is presented in **Graphic 5-1**. The programme illustrates the anticipated duration of the major construction / installation elements. The anticipated maximum total construction duration is approximately four years.

5.9.2 Each construction activity has been scheduled to overlap activities where necessary across the construction schedule This has involved both paralleling some construction activities where practical and increasing the overall duration for other construction activities, as shown in **Graphic 5-1**.

Graphic 5-1 Overall Construction Schedule

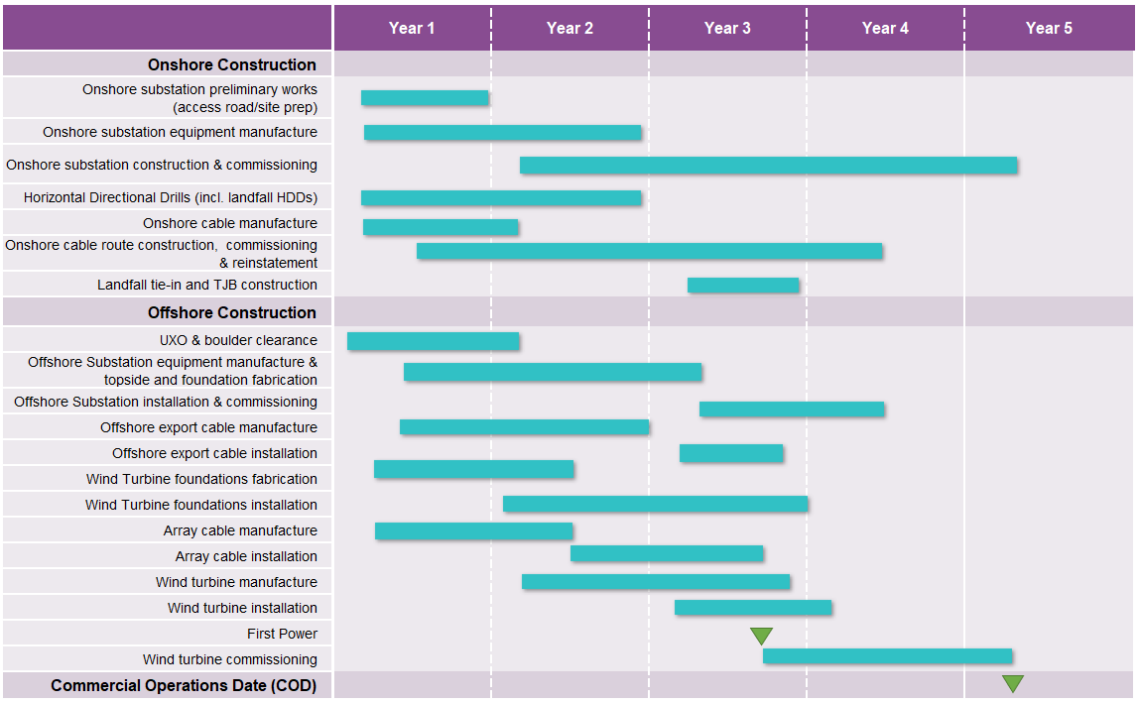

5.10 Construction materials, personnel, plant and equipment requirements

5.10.1 Construction personnel and plant / equipment requirements have been assessed at a high level for the purposes of estimating the number of HGVs required, as well as LGVs required to bring workers to onshore part of the proposed DCO Order Limits. Typically, this is via multi-occupancy vehicles to TCCs, before travelling to specific construction accesses that are part of the onshore part of the proposed DCO Order Limits via five person welfare vans.

5.10.2 As the volume of required construction plant/equipment is anticipated to be relatively low in comparison to other construction activities (e.g. aggregate transportation) associated with the construction of the onshore cable corridor, a high-level estimate has been made only where significant construction plant / equipment requirements are expected.

© WSP Environment & Infrastructure Solutions UK Limited

6. Construction traffic generation

6.1 Assessment methodology

6.1.1 This section presents a high-level overview of the method that has been adopted to estimate the vehicle movements of both heavy goods vehicles (HGVs) and light vehicles (LGVs) throughout the construction phase of the onshore elements of the Proposed Development.

6.1.2 This section presents a high-level overview of the method that has been adopted to estimate the vehicle movements of both heavy goods vehicles (HGVs) and light vehicles (LGVs) throughout the construction phase of the onshore elements of the Proposed Development.

6.1.3 In this TGTN, a vehicle movement has been defined as a one-way journey between two locations. For example, an HGV delivering cables to a TCC and then leaving empty is considered two journeys. A subsequent further two journeys are then required to deliver the cables from the TCC to site (one loaded, one empty).

6.1.4 The estimates within this TGTN have been calculated against a conservative set of assumptions based on the best available information on the onshore works within the proposed DCO Order Limits. The final arrangement of the construction works, and precise methods used will be determined during the detailed design stage and the construction phase of the works depending on the working arrangements favoured by the appointed contractor(s). These factors will influence the number of vehicle movements and the personnel requirements.

6.1.5 For this assessment, each of the construction work sites has been treated separately. Each construction work site along the onshore temporary construction corridor has been broken down into the different activities required. Each activity has then been assessed individually for its requirements.

6.1.6 The following key design assumptions have been determined for each activity:

- duration of activity;
- material and plant required at each work site;
- length of haul road required;
- approximate size of construction workforce; and
- quantity of construction personnel and construction LGVs.

6.1.7 Construction traffic vehicle movements associated with the materials required at the onshore cable corridor and onshore substation have been determined based on the latest bill of quantities.

6.2 Total Construction Traffic Movements

6.2.1 The approach considers a single onshore cable corridor from landfall through to a single onshore substation before connecting by a single onshore cable corridor into the existing substation.

6.2.2 Table 6-1Table 6-1 presents all vehicle movements pertaining to onshore cable corridor and onshore substation construction, broken down by vehicle type and year. Note that movements are all presented as two-way totals, for example an HGV travelling from base to compound is counted as one movement, and then the HGV returning to its base is counted as one movement, (i.e. a total of two movements).

6.2.3 These total construction traffic estimates have been used as a basis for all peak assessment scenarios discussed within this TGTN.

Table 6-1 Two-way vehicle movement summary

Output	Year 1	Year 2	Year 3	Year 4	Total
Peak weekly traffic across the onshore part of the proposed DCO Order Limits – LGV	548	3,632	2,180	1,340	**N/A**
Peak weekly traffic across the onshore part of the proposed DCO Order Limits – HGV	338	1,146	1,022	1,400	**N/A**
Total Vehicle Movements – HGVs	3,874	33,226	22,664	8,438	**68,202**
Total Vehicle Movements – LGVs*	5,598	104,388	62,226	12,162	**184,374**

6.3 Construction Traffic Distribution

6.3.1 The traffic movements were distributed and assigned to a simplified road network diagram for each type of vehicle type, showing two-way movements in and out of the Study Area.

HGVs

6.3.2 HGV construction traffic consists of the delivery of materials or equipment directly to the work sites via the access points. The access strategy uses strategic roads as seen in Table 6-2 for the longest part of the journey as detailed within the **Outline Construction Traffic Management Plan (CTMP) [APP-228]**.

Table 6-2 HGV construction traffic distribution

Route	Percentage
A27 West	27.59%
A27 East	20.69%
A23 North	27.59%
A23 South	24.14%
	100%

6.3.3 The HGV Access Strategy has considered all local constraints, together with policies such as those set out in the West Sussex Transport Plan 2022-2036 (WSCC, 2022), to identify local HGV access routes for assessment purposes which are set out in **Table 6-3**.

6.3.4 HGVs would seek to adhere to these routes wherever possible, with certain exceptions, for example, when materials are required to be delivered from a location along a different route (i.e. where it is not possible to follow the assigned routing). Additionally, there may need to be temporary deviations from the HGV routes in the event of an incident on the original route, leading police to redirect HGVs via an alternative route until the incident has been cleared.

Table 6-3 HGV access routes

Route	HGV access route	Accesses served
1	A27, A259, A284, Ferry Road	A-1
2	A27, A259, A284, Church Road	A-5
3	A27, A259, A284,	A-9
4	A27, A284,	A-12, A-13, A-15, A-16
5	A27	A-21, A-22
6	A27, A280	A-26, A-28
7	A27, A280, A24, A283	A-33, A-35, A-39, A-40, A-41, A-42, A-43
8	A27, A280, A283, B2135, Spithandle Lane	A-47
9	A27, A280, A283, B2135	A-48, A-50

Route	HGV access route	Accesses served
10	A27, A280, A283, A2037, A281	A-52
11	A27, A280, A283, A2037, A281, B2116	A-53
12	A23, A272, A281,	A-56, A-57
13	A27, A23, A24, A272	A-62, A-63
14	A27, A23, A24, A272, Kent Street	A-61, A-64
15	A27, A23, A24, A272, Wineham Lane	A-67, A-68

LGVs

6.3.5 The local access routes from compound to access (indicated in **Figure 7.6.9a-c** of the **Outline CTMP** (Document Reference:7.6) and **Table 6-4**) have been used to determine the impact of LGV and HGV traffic on Receptors.

6.3.6 This LGV routing allowed estimates to be generated of construction traffic flows for all links within the study area, which has then been used to assess the impact of the Proposed Development at identified sensitive receptors.

Table 6-4 HGV access routes

Local access route number	Route via local road network	Temporary construction and operational accesses served
Route 1	A27 - A284 - A259 - Ferry Road or Church Lane	A-01, A-05, A-09, A-13, A-15, A-16, A-20, A21.
Route 2	A27 - A280 - A24 - A283- B2135 – B2116	A-26, A-27, A-28, A-39, A-40, A-41, A-42, A-43, A-47, A-48, A-50, A-53, A-54.
Route 3	A23 - A272 - Wineham Lane or A272 - Kent Street or A272 - A281	A-51, A-52, A-56, A-57, A-61, A-63, A-64, A-67, A-68, A-69.

6.3.7 The LGV Access Strategy is based on a prediction of the construction traffic generation of all onshore elements of the Proposed Development. The construction traffic generation has been applied to the four year construction schedule, which has resulted in construction vehicle movement predictions per vehicle type on a weekly basis per access point.

6.3.8 LGV construction traffic has been distributed onto the network using the following two methods:

- **LGV traffic (staff and other deliveries)** – This comprises staff driving from home to work at the Temporary Construction Compounds (TCC's), as well as occasional deliveries by LGV to the TCC's. In both cases the spatial distribution has been calculated using the 2011 journey to work census data for three local areas associated with the three sections of the onshore cable corridor of the Proposed Development as seen in Table 6-5**.**
- **LGV traffic by Multi-Occupancy Vehicle (MOV) (5 staff)** – LGV construction traffic then uses a circular route to drop off staff/materials between the TCC's and the proposed works sites via the access points along the onshore cable corridor. Given there are three compounds there are three circular routes as seen in Table 6-6.

6.3.9 On this basis, LGVs (staff and deliveries) can use any routes to travel from their home to/from the compounds, there are no prescribed routes. However, three circular routes have been devised to transport staff/deliveries between the compounds and work sites in shared multi-occupancy vehicles.

Table 6-5 LGV construction staff traffic distribution

Entry / Exit points from highways network scope	Construction staff traffic distribution by TCC / onshore substation		
	Section 1	Section 2	Section 3
A259 East	21%	3%	2%
A284 South	33%	2%	1%
A259 West	16%	3%	0%
A23 North	1%	2%	17%
A23 South	3%	3%	6%
A24 North	3%	15%	21%
A3021 south	4%	17%	9%
A27 East	1%	2%	3%
A27 West	9%	2%	0%
A284 North	4%	1%	0%
A283 East	0%	12%	8%
A283 North	0%	0%	0%
A283 West	0%	29%	13%

Entry / Exit points from highways network scope	Construction staff traffic distribution by TCC / onshore substation		
	Section 1	Section 2	Section 3
A272 East	1%	1%	9%
A272 West	0%	2%	3%
A270	3%	6%	6%
A273	0%	0%	0%
A2300	0%	0%	3%
Total	100%	100%	100%

Table 6-6 MOV circular construction routes

Temporary Construction Compound	LGV Multi-Occupancy Vehicle (MOV) circular access routes
Climping compound, off Church Lane	Church Lane (SB), Ferry Road, A259 (NB), A284 (NB), A27 (EB), A280 (NB), A24 (SB), A27 (WB), A284 (SB) A259 (SB), Church Lane (NB)
Washington compound, north of Washington, West Sussex (accessed from A283)	A283 (WB), A283 (EB), B2135 (NB), Spithandle Lane, B2135 (NB), B2116 (WB), A24 (SB), A283 (EB)
Oakendene west compound (accessed from A272)	A272 (WB), A281 (SB), B2116 (WB) towards Partridge Green, B2116 (EB), A281 (SB), B2116 (EB), Wineham Lane (NB), Kent Street (NB), Wineham Lane (SB) to Bolney Substation, Wineham Lane (NB), A272 (EB)

6.4 Construction traffic generation

6.4.1 This section details estimated number of construction vehicle movements, both Heavy Goods Vehicles (HGVs) and Light Goods Vehicles (LGVs) across the study area using the methodology defined in **Section 6.3**.

6.4.2 Construction traffic movements to and from each access have been provided by the project engineering team. These have then been combined with a series of assumptions around routes, occupancy and other relevant factors.

6.4.3 For the purposes of this assessment, access to and from the onshore cable route is assumed through the access points as set out in Table 6-7**.**

Table 6-7 Total two-way construction movements by access

Access ID	Use	Total Two-Way Movements		Comments in relation to ES Addendum
		LGVs	HGVs	
A-01	Construction and operational	2178	1812	N/A
A-02	Light construction	<10	0	10 LGVs included in peak week assessment
A-03	Light construction	<10	0	10 LGVs included in peak week assessment
A-05	Construction and operational	33900	9342	N/A
A-08	Light construction	<10	0	10 LGVs included in peak week assessment
A-09	Construction and operational	1026	1338	N/A
A-12	Construction	456	878	N/A
A-13	Construction and operation	Up to 480	Up to 562	Shared access with A-15
A-14	Light construction and operational	<10	0	10 LGVs included in peak week assessment
A-15	Construction and operational	Up to 480	Up to 562	Shared access with A-13
A-16	Construction and operational	2358	3520	N/A
A-20	Light Construction	<10	0	10 LGVs included in peak week assessment
A-21	Construction	750	1302	Access shared between A-21 and A-22
A-22	Construction			
A-24	Light construction and operational	<10	0	10 LGVs included in peak week assessment
A-25	Light construction and operational	<10	0	10 LGVs included in peak week assessment

© WSP Environment & Infrastructure Solutions UK Limited

Access ID	Use	Total Two-Way Movements		Comments in relation to ES Addendum
		LGVs	HGVs	
A-26	Construction and operational	2238	4892	Access shared between A-26 and A-28
A-28	Construction			
A-33	Construction	1416	2646	N/A
A-35	Construction	60	160	N/A
A-37	Light construction	<10	0	10 LGVs included in peak week assessment
A-38	Light construction	<10	0	10 LGVs included in peak week assessment
A-39	Construction and operational	54546	7660	N/A
A-40	Construction and operational	966	1468	Access shared between A-40 and A-41
A-41	Construction and operational			
A-42	Construction and operational	192	318	N/A
A-43	Construction and operational	1728	3134	N/A
A-46	Light construction and operational	<10	0	10 LGVs included in peak week assessment
A-47	Construction and operational	648	900	N/A
A-48	Construction and operational	672	1416	N/A
A-49	Light construction and operational	<10	0	10 LGVs included in peak week assessment
A-50	Construction and operational	708	1248	N/A
A-52	Construction and operational	642	1550	N/A

© WSP Environment & Infrastructure Solutions UK Limited

Access ID	Use	Total Two-Way Movements		Comments in relation to ES Addendum
		LGVs	HGVs	
A-53	Construction	<10	0	10 LGVs included in peak week assessment
A-56	Construction and operational	780	1182	N/A
A-57	Construction and operational	1116	1816	N/A
A-61	Construction and operational	828	1320	N/A
A-62	Construction	16338	5778	N/A
A-63	Construction and operational	52254	11438	N/A
A-64	Construction and operational	468	892	N/A
A-66	Light construction and operational	<10	0	10 LGVs included in peak week assessment
A-67	Construction and operational	444	644	N/A
A-68	Construction	7182	986	N/A

Assumptions

6.4.4 The following assumptions have been made to provide a high-level estimate of construction traffic:

- for robustness, weekday traffic numbers have been calculated on the basis of dividing the weekly traffic by five working days per week;
- number of person-days – all workers are assumed to travel to the onshore part of the proposed DCO Order Limits once per day via personal LVs (i.e. cars) with one worker per vehicle (i.e. no car sharing). This is a robust assumption for the purposes of the traffic assessment as, in practice, once the workforce becomes established, some degree of car sharing may take place;
- plant and equipment required to complete each construction activity will be stored on the various construction sites (along the onshore cable corridor) that form part of the onshore part of the proposed DCO Order Limits, as opposed to within TCC's. As a result, plant and equipment is associated with only two movements (access and egress) per temporary construction access point;

- all materials are brought directly to the construction sites that are part of the onshore part of the proposed DCO Order Limits, with exception of cement bound sand (CBS), cables and ducts, which will first be stored within TCCs; and
- LGV quantities assume up to five individuals per shared vehicle, and one individual per car arriving at TCCs;
- 2011 Census Journey to Work Data was used to estimate home (or temporary home) locations of the construction workforce, which was then sense checked. The results reflect a workforce which will both aim to encourage local employment as well as uptake of local accommodation by some workers sourced from further afield; and
- For robustness, for the purpose of the traffic analysis, all workers were assumed to travel by car and without car sharing taking place; in practice, there will be measures to encourage sustainable travel amongst the workforce, as set out in the **Outline CWTP** [APP-229] and **Outline OTP** [APP-227].
  - All light construction accesses generate 10 LGV movements during the peak construction traffic week.
  - Where optionality exits between use of accesses (e.g. A13/A15) all construction traffic uses whichever access results in a worst-case impact on nearby receptors.

6.5 ES Chapter 23 Peak Construction Scenarios

6.5.1 Using the construction traffic generation assumptions contained within this TGTN the impact of the Proposed Development at its peak has been assessed in **Chapter 23: Transport** of the ES **[APP-064]** by comparing estimates of construction traffic generated by the Proposed Development with future predicted baseline traffic flows on the road links. This has been completed for different construction traffic scenarios to account for different construction activity peaks across the programme and along the onshore cable corridor as summarised in below:

- **Peak Week 70:** Construction traffic associated with the peak week of four year construction programme (as summarised in Table 23-36 of **Chapter 23: Transport, Volume 2** of the ES **[APP-064]**:
  - The peak week has been obtained by calculating the total number of vehicle trips for all accesses in each week (regardless of whether the trips are LGV or HGV). The peak week has been used to assess each individual receptor which may be impacted by construction traffic associated with that access, thereby offering both a consistent approach (since all traffic flows are from the same week) as well as a robust approach (since it is the peak week as calculated across the entire study area). This same method has been used to identify the peak weeks for each of the three sections outlined below.
- **Section-based peak weeks:** As part of the Proposed Development the entire onshore temporary cable corridor was split into three sections:
  - Section 1 runs north from landfall, across the A259, the River Arun and the two railway lines before crossing the A27 near the edge of the South Downs

at Warningcamp. This section is rural but runs along the edge of the settlements of Littlehampton, Wick, Lyminster and Crossbush. The peak week for section 1 has been identified as week 72 of the construction programme;

- Section 2 runs north east from the Section 1 boundary to a crossing of the A24 near Washington, West Sussex. Between the A27 and A24, the onshore cable corridor has minimal interaction with the local highways network and due to the nature of access options, will make use of a continuous haul road. The peak week for section 2 has been identified as week 83 of the construction programme; and
- Section 3 runs from the Section 2 boundary along the A283 corridor before turning north east to Partridge Green and further East to Wineham/Bolney. This section is flat and rural in character but with more crossings of roads. The peak week for section 3 has been identified as week 125 of the construction programme

- **Annual Average Weekday Traffic (AAWT**) for year 1, 2, 3 and 4 of the construction programmes (as summarised in Table 23-38 of **Chapter 23: Transport, Volume 2** of the ES **[APP-064]**.

6.6 ES Addendum Further Sensitivity Tests

6.6.1 A further sensitivity test has been undertaken which assesses the peak week for construction traffic at each receptor. The week used to assess the impact has been based on the peak week in total construction traffic and the peak week of HGV construction traffic. Whilst recognising that this is an unrealistic scenario in practice due to those weeks occurring at different weeks in the programme, it enables the worst case for each receptor to be considered. A summary of the methodology used as part of this additional sensitivity test and the outcomes of the assessment are outlined below.

Total Construction Traffic Peak

6.6.2 This assignment exercise was used to calculate peak construction traffic flows (two-way movements) by access, for each type of construction vehicle (LGVs, LGV MOVs and HGVs) for each week of the construction programme. This produced 612 separate road network diagrams (204 for LGV, 204 for LGV MOV and 204 for HGV) one for each week of the construction programme **Graphic 6-1Error! Reference source not found.** shows an excerpt from the Week 2 road network diagram, which shows 12 one-way movements, or 24 two-way movements pass Receptor 2 on Church Lane

Graphic 6-1 Week 2, Total Peak Week excerpt from network diagram

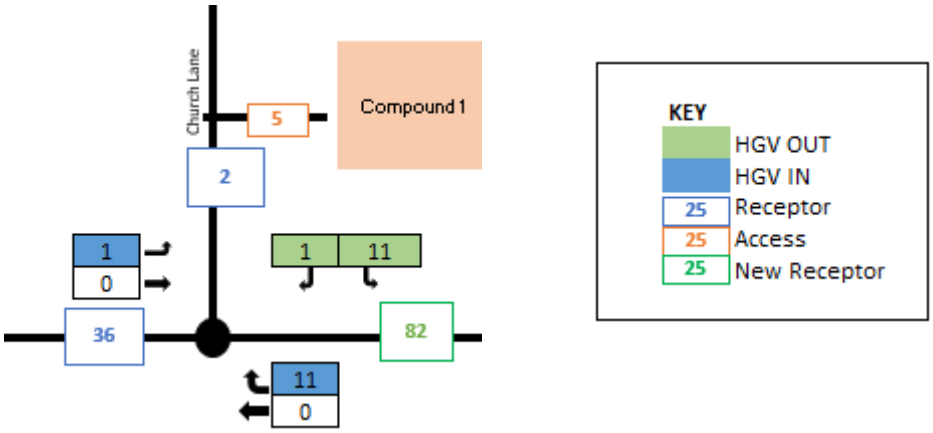

6.6.3 From these network diagrams, three separate matrices showing two-way movements (using the turning movements either side of each receptor) have been developed for LGVs, LGV MOVs and HGVs by week and receptor. These three matrices have then been summed to provide a matrix for the Total vehicles (HGV+ LGV+LGV MOV) for each week as seen in the example in **Graphic 6-2** and the cumulative impact on each receptor.

Graphic 6-2 Total vehicles on a week-by-week basis

	A	B	C	D	E	F	G	H	I	J	K	L	M	N	O
1	Week	Receptor	1	2	3	4	5	6	7	8	9	10	11	12	13
2	0		16	23.77603	2.611517	1.393625	22.59075	19.43105	19.43105	0	1.726147	0	21.18964	8.746148	0.746148
3	1		16	23.77603	2.611517	1.393625	22.59075	19.43105	19.43105	0	1.726147	0	21.18964	8.746148	0.746148
4	2		16	23.77603	2.611517	1.393625	22.59075	19.43105	19.43105	0	1.726147	0	21.18964	8.746148	0.746148
5	3		16	23.77603	2.611517	1.393625	22.59075	19.43105	19.43105	0	1.726147	0	21.18964	8.746148	0.746148
6	4		16	23.77603	2.611517	1.393625	22.59075	19.43105	19.43105	0	1.726147	0	21.18964	8.746148	0.746148
7	5		16	23.77603	2.611517	1.393625	22.59075	19.43105	19.43105	0	1.726147	0	21.18964	8.746148	0.746148
8	6		16	23.77603	2.611517	1.393625	22.59075	19.43105	19.43105	0	1.726147	0	21.18964	8.746148	0.746148
9	7		16	23.77603	2.611517	1.393625	22.59075	19.43105	19.43105	0	1.726147	0	21.18964	8.746148	0.746148
10	8		16	23.77603	2.611517	1.393625	22.59075	19.43105	19.43105	0	1.726147	0	21.18964	8.746148	0.746148
11	9		26.8	232.576	2.611517	40.01431	176.7701	175.2327	175.2327	0	40.34684	0	215.612	157.5255	144.1255

6.6.4 This total has then been used to determine the peak week for each receptor as seen in **Graphic 6-3**. For example, Receptor 6 the peak Week is 72. Therefore, the peak impact at Receptor 6 in Week 72, is 227 HGVs and 375 LGVs (44 LGVs + 330 LGV MOVs).

Graphic 6-3 Impact Assessment based on Total peak week

		Total						HGV	LGV	MOV	LGV+MOV
Receptor		Value	Week Start	Week End		Week Start	Week End	Value	Value	Value	Value
1		469	70	70		70	70	160	0	309	309
2		649	72	72		72	72	256	62	330	393
3		40	63	64		63	64	0	40	0	40
4		378	162	162		162	162	376	2	0	2
5		609	72	72		72	72	227	51	330	382
6		602	72	72		72	72	227	44	330	375
7		602	72	72		72	72	227	44	330	375
8		0	0	204		0	204	0	0	0	0
9		378	162	162		162	162	376	2	0	2

HGV Construction Traffic Peak

6.6.5 Similarly, a sensitivity test has also been undertaken using the HGV peak week as seen in **Graphic 6-4**. For example, Receptor 6 the peak Week is 83. Therefore, the peak impact at Receptor 6 in Week 83, is 248 HGVs and 281 LGVs (59 LGVs + 222 LGV MOVs).

Graphic 6-4 Impact Assessment based on HGV peak week

		HGV						HGV	LGV	MOV	LGV+MOV
Receptor		Value	Week Start	Week End		Week Star	Week End	Value	Value	Value	Value
1		160	70	70		70	70	160	0	309	309
2		274	158	158		158	158	274	8	52	60
3		0	0	204		0	204	0	3	0	3
4		376	162	162		162	162	376	2	0	2
5		248	83	83		83	83	248	64	222	286
6		248	83	83		83	83	248	59	222	281
7		260	162	162		162	162	260	7	75	82
8		0	0	204		0	204	0	0	0	0
9		376	162	162		162	162	376	2	0	2

6.6.6 Importantly, this methodology shows individual peak week construction traffic flows for each receptor, meaning that peaks at each receptor do not necessarily happen in the same week. For example, as seen in **Graphic 6-4**Error! Reference source not found. Receptor 1 (Ferry Road) the peak week is Week 70, whilst the peak week for Receptor 7 (A284 North of Wick) is Week 72. This ensures that a worst-case assessment is completed for all identified receptors within the Study Area.

6.6.7 The estimates within this TGTN have been calculated against a conservative set of assumptions based on the best available information on the onshore works within the proposed DCO Order Limits. The final arrangement of the construction works, and precise methods used will be determined during the detailed design stage and the construction phase of the works depending on the working arrangements favoured by the appointed contractor(s). These factors will influence the number of vehicle movements and the personnel requirements.

6.6.8 Based on the methodologies described above for LGVs (staff and deliveries) and HGVs, Table 6-8 presents the LGV and HGV peak week movements at each construction access and Table 6-9 presents the LGV and HGV movements (two-way total) for each receptor location.

6.6.9 In viewing Table 6-8 it should be noted that the peak construction traffic week occurs at different accesses during different weeks of the construction programme.

Table 6-8 Peak weekly movements by access

Access ID	Peak Total Weekly Two-way Movements	
	HGVs	LGVs
A-01	160	96
A-02	N/A	10

Access ID	Peak Total Weekly Two-way Movements	
	HGVs	LGVs
A-03	N/A	10
A-05	274	1242
A-08	N/A	10
A-09	232	96
A-12	234	60
A-13	130	96
A-14	N/A	10
A-15	All construction traffic routed through A-13	
A-16	218	132
A-20	N/A	10
A-21	98	48
A-22		
A-24	N/A	10
A-25	N/A	10
A-26	244	108
A-28		
A-33	254	72
A-35	76	36
A-37	N/A	10
A-38	N/A	10
A-39	266	1656
A-40	160	96
A-41		
A-42	78	60
A-43	236	96

© WSP Environment & Infrastructure Solutions UK Limited

Access ID	Peak Total Weekly Two-way Movements	
	HGVs	LGVs
A-46	N/A	10
A-47	160	60
A-48	198	60
A-49	N/A	10
A-50	172	60
A-52	242	60
A-53		
A-56	150	60
A-57	188	96
A-61	142	60
A-62	326	612
A-63	336	588
A-64	274	60
A-66	N/A	10
A-67	170	60
A-68	92	180

Table 6-910 Onshore construction traffic impact per receptor

Link No	Location	Total Peak Week Construction Traffic (per weekday)		HGV Peak Week Construction Traffic (per weekday)	
		Total Vehicles	HGVs	Total Vehicles	HGVs
1	Ferry Road	94	32	94	32
2	Church Lane	130	51	67	55
3	Ford Road	8	0	1	0

© WSP Environment & Infrastructure Solutions UK Limited

Link No	Location	Total Peak Week Construction Traffic (per weekday)		HGV Peak Week Construction Traffic (per weekday)	
		Total Vehicles	HGVs	Total Vehicles	HGVs
4	A27, West of Arundel	76	75	76	75
5	A259, West of Wick	122	45	107	50
6	A284, North of Wick	120	45	106	50
7	A284 Lyminster	120	45	68	52
9	A27, Arundel Station	76	75	76	75
11	A27, South of Crossbush	179	105	179	105
12	A27 High Salvington	131	97	130	97
13	A24/A27 Offington (Warren Road)	99	97	99	97
14	A24 Findon	57	0	3	0
15	A280 Long Furlong	108	67	100	91
16	A283 West of A24	139	51	139	51
17	A283 East of A24	157	43	135	44
18	B2135, South of Ashurst	68	28	46	40
19	A283, Steyning	79	78	79	78
20	A24, South of A272	97	19	64	39
21	B2116 Patridge Green Road	4	0	0	0
22	A281, South Shermanbury	69	2	53	48
23	A281, South of Cowfold	71	1	23	12

© WSP Environment & Infrastructure Solutions UK Limited

Link No	Location	Total Peak Week Construction Traffic (per weekday)		HGV Peak Week Construction Traffic (per weekday)	
		Total Vehicles	HGVs	Total Vehicles	HGVs
24	A281, Cowfold Centre	172	19	90	39
25	A272, Station Road, Cowfold	172	19	90	39
26	Wineham Lane, South of A272	69	0	67	41
27	A272, West of A23	197	49	150	101
28	A23, North of the A272	111	54	81	77
29	B2188, Sayers Common*	0	0	0	0
30	B2116, Henfield Road, Albourne*	0	0	0	0
31	A23, North of the A272	95	65	89	87
32	A27, West of A23	122	121	122	121
33	A27, East of A23	72	41	60	58
34	A259, West of Church Street	23	19	23	19
35	A259, East of Wick	13	0	1	0

6.6.10 Table 6-11 provides the HGV and LGV movements generated by construction at each of the new receptors identified within **Chapter 32: ES Addendum** of the ES (Document Reference: 6.2.32).

Table 6-11 Onshore construction traffic impact per new receptors

Link No	Location	Total Peak Week Construction Traffic (per weekday)		HGV Peak Week Construction Traffic (per weekday)	
		Total Vehicles	HGVs	Total Vehicles	HGVs
A	B2139, Coolham Road	9	0	0	0
B	A272, West Chiltington Lane, Pound Lane, Shipley Road	9	0	0	0
C	A272, Cowfold Road	172	19	90	39
D	B2135, Steyning Road, East of Park Lane	36	0	1	0
E	A272, Bolney Road, East of A281, North of Oakfield Road	167	19	89	39
F	A272, Cowfold Road West of the A23	197	49	150	101
G	A281, North of Woodside Close	71	1	23	12
H	B2135 / B2116 High Street, Partridge Green	4	0	0	0
I	A281, Brighton Road, North of Partridge Green Road	71	1	23	12
J	Wineham Lane	69	0	67	41
K	B2118, East of B2116 Henfield Road**	0	0	0	0
L	B2135, North of Spithandle Lane	81	6	32	20

© WSP Environment & Infrastructure Solutions UK Limited

Link No	Location	Total Peak Week Construction Traffic (per weekday)		HGV Peak Week Construction Traffic (per weekday)	
		Total Vehicles	HGVs	Total Vehicles	HGVs
M	A281, High Steet, Henfield	52	37	51	48
N	A281, Brighton Road*	0	0	0	0
O	A283 Storrington Road, Northeast of Sullington Lane	139	51	139	51
P	Michelgrove Lane	108	67	100	91
Q	A284, Lyminster Road	120	45	68	52
R	Church Lane, North of the A259	130	51	67	55
S	Ford Road, Station Road*	8	0	0	0
T	Ford Road	8	0	0	0
U	Kent Street	35	0	32	28

* zero values highlight receptors that were identified but are not anticipated to be used by construction traffic associated with the Proposed Development

© WSP Environment & Infrastructure Solutions UK Limited

7. Operation and maintenance traffic generation

7.1 Overview

7.1.1 The operational lifetime of the Proposed Development is expected to be around 30 years. Taking place after commissioning of the Proposed Development, operation and maintenance activities can be divided into three main categories:

- scheduled maintenance;
- unscheduled maintenance; and
- special maintenance in the event of major equipment breakdown and repairs.

7.2 Traffic generation

7.2.1 Maintenance of the onshore cable is expected to be minimal. During operation and maintenance, periodic testing of the cable is likely to be required (every two to five years). This will require access to the link boxes at defined inspection points along the onshore cable route. This will involve attendance by up to three light vehicles, such as vans, in a day at any one location. The vehicles will gain access using existing field accesses and side accesses as agreed with landowners to reach the relevant sections of the onshore cable.

7.2.2 Monitoring of the onshore substation will be done remotely using CCTV technology and other remote monitoring equipment. The security fencing installed during construction will remain in place. Certain areas of the onshore substation will have permanent light fittings; however, these lights will only be used when required for unscheduled maintenance or emergency repair purposes.

7.2.3 Unscheduled maintenance or emergency repair visits will typically involve a very small number of vehicles, typically light vans. Infrequently, equipment may be required to be replaced, then the use of an occasional HGV may be utilised, depending on the nature of the repair.

7.2.4 Inspection and minor servicing may be required for the electrical plant, but it is anticipated that the substation will require minimal scheduled maintenance and operation activities.

7.2.5 Impacts on National Parks from traffic generated from Newhaven Port in Study Area 2 has been considered.

7.2.6 During the operation and maintenance phase, it is currently estimated that 40-50 full time staff will be required per day. For the purposes of assessment in this chapter, it is proposed to assess a worst case of 50 staff per day into and out of East Quay, Newhaven Port, which currently accommodates the existing Rampion 1 project operation and maintenance facility.

7.2.7 For the daily traffic generation, it is assumed that all staff arrive by private car with no car sharing or use of sustainable modes. This results in 100 two staff vehicle movements per day, the impacts of which on the local highways network are assessed in of **Chapter 23: Transport, Volume 2** of the ES **[APP-064]**.

7.3 Traffic distribution

7.3.1 The traffic is proposed to be distributed following the same approach as staff traffic for the construction phase and using journey to work data. An assessment of journey to work data based on the existing port indicates the following distribution of traffic and where it will leave Study Area 2:

- A259 West (Newhaven) – 30.58%;
- A259 East – 37.79%;
- A27 West – 18.64%; and;
- A27 East – 12.99%.

7.3.2 **Figure 23.21a-d, Volume 3** of the ES **[APP-064]** sets out the daily traffic impacts on the local highways network and the location of the highways links affected is set out in **Figure 23.22, Volume 3** of the ES **[APP-064]**.

7.3.3 The impacts on National Parks from operational and maintenance traffic from Newhaven have been considered in Study Area 2.

Table 7-1 Onshore operation and maintenance traffic percentage impact per highways link – Study Area 2

Highway Link	Future Year Base Traffic (2030)		Peak Week Staff Traffic (per day)	
	Total Vehicles	HGVs	Total Vehicles	HGVs
1 - McKinley Road	3055	265	100	0
2 - A26 South Heighton	18722	1454	32	0
3 - A26 Beddingham	18722	1454	32	0
4 - A27 West of A26	40726	2205	32	0
5 - A26 East of A25	29199	1257	19	0

© WSP Environment & Infrastructure Solutions UK Limited

8. Decommissioning traffic generation

8.1 Onshore decommissioning

Onshore cable

8.1.1 It is anticipated that the onshore electrical cables will be left in-situ with ends cut, sealed and buried to minimise environmental effects associated with removal.

8.1.2 The only onshore element of the Proposed Development that will require to be removed in the decommissioning phase is the onshore substation and therefore only a small part of Study Area 1 will be affected by decommissioning traffic.

Onshore substation

8.1.3 The onshore substation may be used as a substation site after decommissioning of the Proposed Development or it may be upgraded for use by another offshore wind project. This will be subject to a separate planning application.

8.1.4 Should the onshore substation need to be decommissioned fully, however, the decommissioning works are likely to be undertaken in reverse to the sequence of construction works and involve similar levels of equipment. All relevant sites will be restored to their original states or made suitable for an alternative use.

8.1.5 The decommissioning duration of the onshore infrastructure may take a comparable amount of time as construction of the Proposed Development, up to four years, although this indicative timing may reduce.

8.1.6 The calculations indicate that the peak week of the construction of the onshore substation will result in a peak traffic week that comprises:

- 76 two-way HGV movements during temporary compound construction;
- 36 two-way LGV movements during temporary compound construction;
- 2 onshore substation two-way HGV movements;
- 120 onshore substation two-way HGV movements; and
- Total two-way vehicle movements: 196 HGV and 38 LGV per week

8.1.7 This will result in the following daily traffic which have informed the assessment in **Chapter 23: Transport, Volume 2** of the ES **[APP-064].**

- 39 two-way HGVs; and
- 8 two-way LGVs.

8.1.8 Distribution of this traffic during the decommissioning phase has been based on the same distribution patterns as the construction phase as set out in Table 6-2 and Table 23-27 of the **Chapter 23: Transport, Volume 2** of the ES **[APP-064]**.

8.1.9 It is considered that the decommissioning of the onshore substation will require the same levels of traffic generation as the construction phase and therefore the peak construction traffic generation of the construction phase will be used as a basis for assessment.

8.1.10 Therefore, using Oakendene onshore substation as the basis for assessment and the traffic distribution used for construction. It is considered that only Highway link 27 located on the A272, West of A23 will require assessment for the decommissioning phase, given the logical HGV routes from the SRN.

8.1.11 Unlike the assessment for the construction phase, Highways link (27) that requires assessment would only have to accommodate traffic associated with the onshore substation decommissioning and not the traffic associated with the onshore cable decommissioning as the onshore cable will be left in situ. As such traffic at this highways link will be less than set out in the assessment for the construction phase at these two links as the additional cable related traffic in the construction phase would not be present in the decommissioning phase. An assessment has still been provided for robustness due to the different future year for the decommissioning phase.

8.1.12 **Table 8-1** shows the anticipated traffic impact during the decommissioning stage, which is de minimis.

Table 8-1 Onshore substation decommissioning traffic percentage impact per highways link

Highway Link	Future Year Base Traffic (2051)		Peak Week Staff Traffic (per day)	
	Total vehicles	HGVs	Total vehicles	HGVs
27 – A272, West of A23	21414	1069	156	48

Offshore

8.1.13 The offshore decommissioning phase has been scoped out of further assessment as it is proposed that only above several elements of the Proposed Development are removed such as the offshore substations and WTGs. As such, the onshore traffic generation is expected to be significantly lower than the construction phase.

8.1.14 As with the construction phase, the works required to decommission the offshore elements of the Proposed Development are likely to be undertaken from a few ports across Europe and the UK, and as such the impacts on UK roads will be mitigated by this construction strategy. Based on the above, the offshore decommissioning phase has been scoped out of the assessment.

© WSP Environment & Infrastructure Solutions UK Limited

9. Glossary of terms and abbreviations

Term (Acronym)	Definition
AADF	Annual average weekday flow
AAWT	Annual average weekday traffic
CBS	cement bound sand
CMB	construction management base
FOC	Fibre Optic Cable
ha	hectare
HDD	horizontal directional drill
HGV	Heavy Goods Vehicle
HVAC	High Voltage Alternating Current
ID	identification
JB	joint bay
kg	kilogram
Km	kilometre
kV	kilovolt
LGV	Light Goods Vehicle
m	metres
mm	millimetres
Preliminary Environmental Information Report (PEIR)	The written output of the Preliminary Environmental Impact Assessment undertaken for the Proposed Development. It was developed to support Statutory Consultation and presented the preliminary findings of the assessment to allow an informed view

Term (Acronym)	Definition
	to be developed of the Proposed Development, the assessment approach that was undertaken, and the preliminary conclusions on the likely significant effects of the Proposed Development and environmental measures proposed.
TCC	temporary construction compound
TJB	transition joint bay

10. References

CrashMap, (2021). *Crashmap*. [online]. Available at: [redacted] [Accessed 4 April 2023].

Department for Transport (DfT), (2022). *DfT Circular 01/2022 Strategic Road Network and the Delivery of Sustainable Development, Page 1-23*. [online]. Available at: Strategic road network and the delivery of sustainable development - GOV.UK (www.gov.uk) [Accessed 4 April 2023].

Department for Transport (DfT), (2021). *RAS0302 Reported road collision rates by severity, road type and class, Great Britain, ten years up to 2021* https://www.gov.uk/government/statistical-data-sets/reported-road-accidents-vehicles-and-casualties-tables-for-great-britain#road-type-ras03 [online]. Available at: [Accessed 4 April 2023].

Department for Transport (DfT), (2020). *Road Traffic Statistics*. [online]. Available at: https://roadtraffic.dft.gov.uk/#6/55.254/-6.053/basemap-regions-countpoints [Accessed 4 April 2023].

Department for Transport (DfT), (2021). *Quarterly traffic estimates (TRA25), TRA2501: Road traffic (vehicle miles) by vehicle type in Great Britain*. [online]. Available at: https://www.gov.uk/government/statistical-data-sets/tra25-quarterly-estimates [Accessed 30 June 2021].

Department for Transport (DfT), (2022). *Road Safety Data*. https://www.data.gov.uk/dataset/cb7ae6f0-4be6-4935-9277-47e5ce24a11f/road-safety-data [online]. Available at: [Accessed 4 April 2023].

Department of Energy and Climate Change (DECC), (2011). *Overarching National Policy Statement for Energy (EN-1).* [online]. Available at: https://assets.publishing.service.gov.uk/government/uploads/system/uploads/attachment_data/file/47854/1938-overarching-nps-for-energy-en1.pdf [Accessed 4 April 2023].

E.On/RSK Environmental Ltd, (2012). *Rampion Offshore Wind Farm, Environmental Statement, RSK, Section 29 Transport.* [online]. Available at: [redacted] [Accessed 4 April 2023].

Google, (2021). *Google Maps and Google Traffic*. [online]. Available at [redacted] [Accessed 4 April 2023].

Horsham District Local Council, (2019). *Draft Horsham District Local Plan 2019-2036*. [online]. Available at: https://strategicplanning.horsham.gov.uk/LocalPlanReview/viewCompoundDoc?docid=10336756 [Accessed 4 April 2023].

Institute of Environmental Assessment (IEA), (1993). *Guidance Note 1 – Guidelines for the Environmental Assessment of Road Traffic*.

Mid Sussex District Council, (2018). *Mid Sussex District Plan 2014 – 2031, Pages 78-79*. [online]. Available at: https://www.midsussex.gov.uk/media/2367/district-plan-adoption-version.pdf [Accessed 04 April 2023].

Ministry of Housing Communities and Local Government, (2021). *National Planning Policy Framework, pages 31-32*. [online]. Available at: https://www.gov.uk/government/publications/national-planning-policy-framework--2 [Accessed 04 April 2023].

Office for National Statistics, (2011). *Nomis Official Labour Market Statistics*. [online] Available at [redacted] [Accessed 04 April 2023].

Owen Williams Consultants, (1996). *Newhaven Port Access Road – Site Plan, East Sussex County Council, Drawing 5A928/12/2*. [online]. Available at: https://www.eastsussex.gov.uk/roadsandtransport/roads/roadschemes/newhaven-port-access-road/scheme-details/ [Accessed 04 April 2023].

Planning Inspectorate (PINS). (2020a). *Scoping Opinion: Proposed Rampion 2 Offshore Wind Farm. Case Reference EN010117*, [online]. Available at: https://infrastructure.planninginspectorate.gov.uk/wp-content/ipc/uploads/projects/EN010117/EN010117-000045-EN010117 Scoping Opinion.pdf [Accessed 04 April 2023].

Planning Inspectorate, (2020b). *Advice Note Seven: EIA: Process, Preliminary Environmental Information, and Environmental Statements (Version 7)*. [online]. Available at: https://infrastructure.planninginspectorate.gov.uk/legislation-and-advice/advice-notes/advice-note-seven-environmental-impact-assessment-process-preliminary-environmental-information-and-environmental-statements/ [Accessed 04 April 2023].

Rampion Extension Development Limited (RED), (2020). *Rampion 2 Offshore Wind Farm – Environmental Impact Assessment Scoping Report*, [online]. Available at: https://infrastructure.planninginspectorate.gov.uk/wp-content/ipc/uploads/projects/EN010117/EN010117-000006-EN010117%20-%20Scoping%20Report.pdf [Accessed 04 April 2023].

Standards for Highways, (2020). *Design Manual for Roads and Bridges*. [online]. Available at: https://www.standardsforhighways.co.uk/dmrb/ [Accessed 04 April 2023].

Sustrans, (2021). *Sustrans National Cycle Network Map*. [online]. Available at: [redacted] Accessed 04 April 2023].

West Sussex County Council (WSCC), (2022), *West Sussex Transport Plan 2022-2036, Pages 26-29, 35, 44, 50-51.* https://www.westsussex.gov.uk/media/17428/wstp.pdf [online]. Available at: [Accessed 04 April 2023].

West Sussex County Council (WSCC), (2020a). *West Sussex Walking and Cycling Strategy 2016-2026, Pages 1-52*. [online]. Available at: https://www.westsussex.gov.uk/media/9584/walking_cycling_strategy.pdf [Accessed 04 April 2023].

West Sussex County Council (WSCC), (2020b). *Permanent Automatic Traffic Counts.* [online]. Available at: https://www.westsussex.gov.uk/roads-and-travel/traffic-management/traffic-counts/ [Accessed 04 April 2023].

West Sussex County Council (WSCC), (2021a). *iMap.* [online]. Available at: https://www.westsussex.gov.uk/land-waste-and-housing/public-paths-and-the-countryside/public-rights-of-way/public-rights-of-way-imap/imap/ [Accessed 04 April 2023].

West Sussex County Council (WSCC), (2021b). *Bus routes and timetables*. [online]. Available at: https://www.westsussex.gov.uk/roads-and-travel/travel-and-public-

transport/bus-and-coach-travel/plan-your-journey/bus-routes-and-timetables/ [Accessed 04 April 2023].

Worthing Borough Council, (2023). *Local Plan 2020 – 2036, Page 149-150*. [online]. Available at: https://www.adur-worthing.gov.uk/media/Media,169486,smxx.pdf [Accessed 04 April 2023].

© WSP Environment & Infrastructure Solutions UK Limited

Page intentionally blank

© WSP Environment & Infrastructure Solutions UK Limited

Annex A Traffic calculations

© WSP Environment & Infrastructure Solutions UK Limited

Page intentionally blank

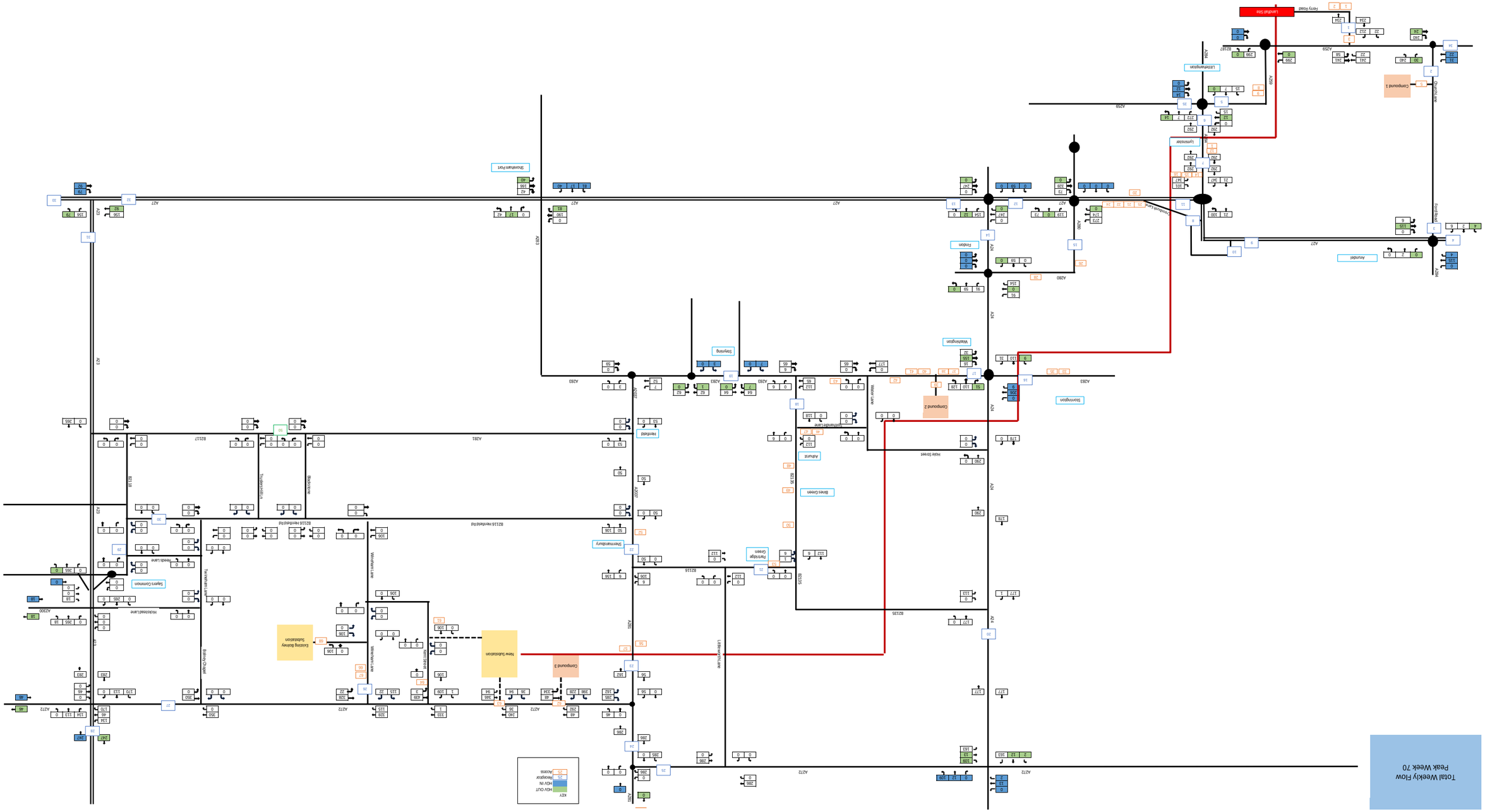
Total Weekly Flow
Peak Week 70
KEY
HGV OUT
HGV IN
Reservoir
Nodes
Landfill Site
Entry Road
Compound 1
Compound 2
Compound 3
New Substation
Existing Bonney Substation
Church Lane
Front Road
Arundel
Thrussington Lane
Lynnstoke
Frisdon
Sherrumbury
Hartfield
Adhurst
Burns Green
Furnidge Greens
Storrington
Warrington
Seeyrung
Lidlethwaite
Shorehurn Port
Sherrumbury
Sayers Common
Hazelwell Lane
Bonney Chase
Main Street
Thrussington
Melton Lane
Wymount Lane
Hartfield Rd
Hale Street
Lidlethwaite Lane
Storrington Lane
Warrington Lane
A21
A23
A24
A27
A272
A280
A281
A282
A283
A284
A285
A286
A287
A288
A289
A290
A291
A292
A293
A294
A295
A296
A297
A298
A299
A300
A301
A302
A303
A304
A305
A306
A307
A308
A309
A310
A311
A312
A313
A314
A315
A316
A317
A318
A319

Total Weekly Flow
Section 1 - Peak Week 72

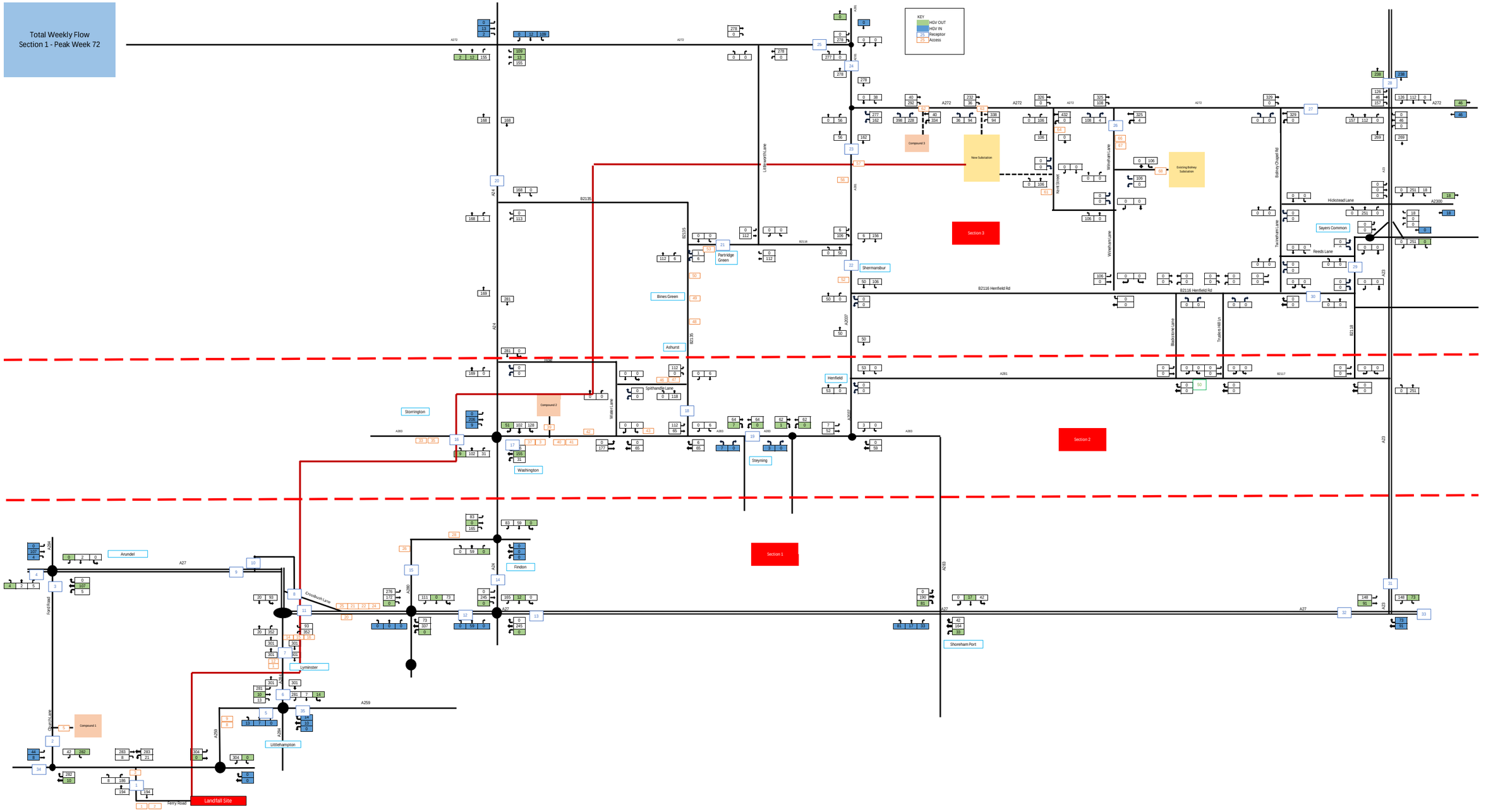

Total Weekly Flow
Section 2 - Peak Week 83

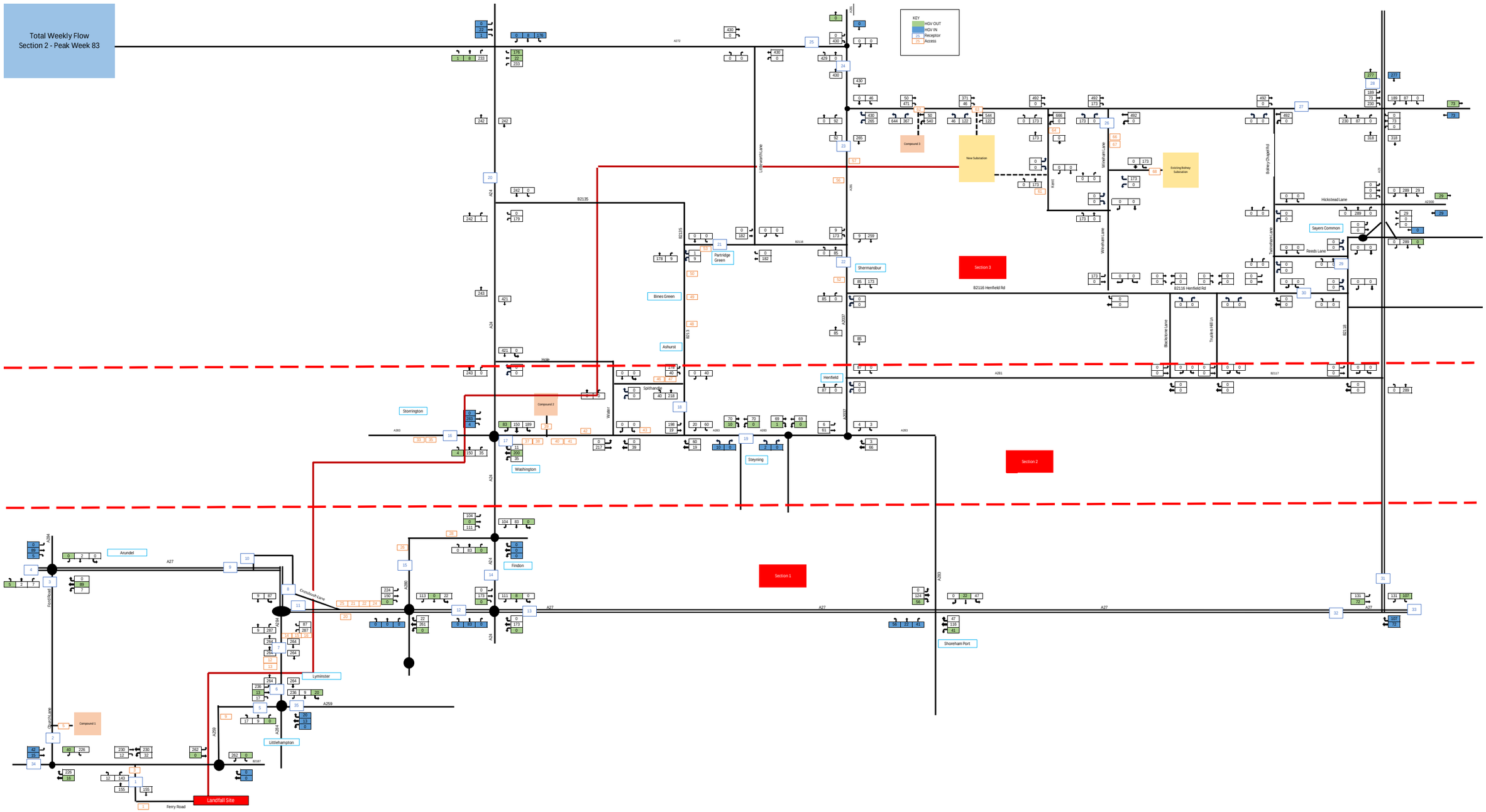

Total Weekly Flow
Section 3 - Peak Week 125

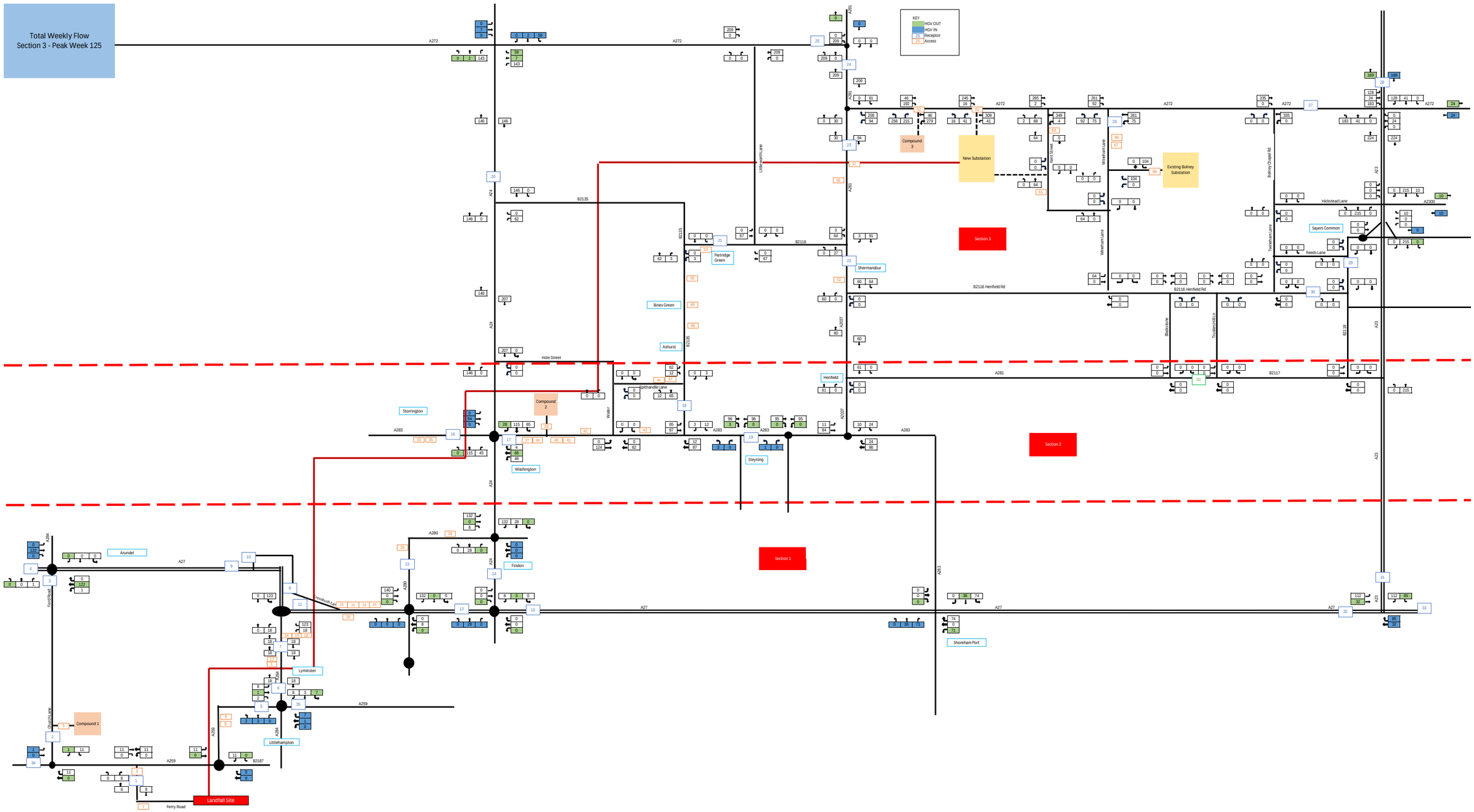

Total Peak Week																																		
Receptor	1	2	3	4	5	6	7	8	9	10	11	12	13	14	15	16	17	18	19	20	21	22	23	24	25	26	27	28	29	30	31	32	33	34	35
Week																																			
0	16	24	3	1	23	19	19	0	2	0	21	9	1	15	12	19	38	4	5	11	0	6	6	11	11	8	10	4	0	0	3	4	4	2	4
1	16	24	3	1	23	19	19	0	2	0	21	9	1	15	12	19	38	4	5	11	0	6	6	11	11	8	10	4	0	0	3	4	4	2	4
2	16	24	3	1	23	19	19	0	2	0	21	9	1	15	12	19	38	4	5	11	0	6	6	11	11	8	10	4	0	0	3	4	4	2	4
3	16	24	3	1	23	19	19	0	2	0	21	9	1	15	12	19	38	4	5	11	0	6	6	11	11	8	10	4	0	0	3	4	4	2	4
4	16	24	3	1	23	19	19	0	2	0	21	9	1	15	12	19	38	4	5	11	0	6	6	11	11	8	10	4	0	0	3	4	4	2	4
5	16	24	3	1	23	19	19	0	2	0	21	9	1	15	12	19	38	4	5	11	0	6	6	11	11	8	10	4	0	0	3	4	4	2	4
6	16	24	3	1	23	19	19	0	2	0	21	9	1	15	12	19	38	4	5	11	0	6	6	11	11	8	10	4	0	0	3	4	4	2	4
7	16	24	3	1	23	19	19	0	2	0	21	9	1	15	12	19	38	4	5	11	0	6	6	11	11	8	10	4	0	0	3	4	4	2	4
8	16	24	3	1	23	19	19	0	2	0	21	9	1	15	12	19	38	4	5	11	0	6	6	11	11	8	10	4	0	0	3	4	4	2	4
9	27	233	3	40	177	175	175	0	40	0	216	158	144	25	58	35	95	10	106	23	1	17	17	35	35	19	33	106	0	0	101	167	79	57	5
10	23	193	3	30	147	145	145	0	30	0	175	130	118	22	46	29	79	8	80	19	1	13	14	27	27	15	26	83	0	0	79	132	63	47	5
11	23	193	3	30	147	145	145	0	30	0	175	130	118	22	46	29	79	8	80	19	1	13	14	27	27	15	26	83	0	0	79	132	63	47	5
12	23	193	3	30	147	145	145	0	30	0	175	130	118	22	46	29	79	8	80	19	1	13	14	27	27	15	26	83	0	0	79	132	63	47	5
13	23	193	3	30	147	145	145	0	30	0	175	130	118	22	46	29	79	8	80	19	1	13	14	27	27	15	26	83	0	0	79	132	63	47	5
14	23	193	3	30	147	145	145	0	30	0	175	130	118	22	46	29	79	8	80	19	1	13	14	27	27	15	26	83	0	0	79	132	63	47	5
15	23	193	3	30	147	145	145	0	30	0	175	130	118	22	46	29	79	8	80	19	1	13	14	27	27	15	26	83	0	0	79	132	63	47	5
16	23	193	3	30	147	145	145	0	30	0	175	130	118	22	46	29	79	8	80	19	1	13	14	27	27	15	26	83	0	0	79	132	63	47	5
17	16	24	3	1	23	19	19	0	2	0	21	9	1	15	12	19	38	4	5	11	0	6	6	11	11	8	10	4	0	0	3	4	4	2	4
18	16	24	3	1	23	19	19	0	2	0	21	9	1	15	12	19	38	4	5	11	0	6	6	11	11	8	10	4	0	0	3	4	4	2	4
19	16	24	3	18	23	19	19	0	19	0	38	9	1	15	30	19	38	4	5	29	0	6	6	28	28	8	55	21	0	0	31	19	17	2	4
20	16	24	3	9	23	19	19	0	9	0	28	9	1	15	20	19	38	4	5	19	0	6	6	18	18	8	29	11	0	0	15	10	10	2	4
21	16	24	3	9	23	19	19	0	9	0	28	9	1	15	20	19	38	4	5	19	0	6	6	18	18	8	29	11	0	0	15	10	10	2	4
22	16	24	3	9	23	19	19	0	9	0	28	9	1	15	20	19	38	4	5	19	0	6	6	18	18	8	29	11	0	0	15	10	10	2	4
23	16	24	3	9	23	19	19	0	9	0	28	9	1	15	20	19	38	4	5	19	0	6	6	18	18	8	29	11	0	0	15	10	10	2	4
24	16	24	3	9	23	19	19	0	9	0	28	9	1	15	20	19	38	4	5	19	0	6	6	18	18	8	29	11	0	0	15	10	10	2	4
25	16	24	3	9	23	19	19	0	9	0	28	9	1	15	20	19	38	4	5	19	0	6	6	18	18	8	29	11	0	0	15	10	10	2	4
26	16	24	3	18	23	19	19	0	19	0	38	9	1	15	30	19	38	4	5	29	0	6	6	28	28	8	55	21	0	0	31	19	17	2	4
27	33	41	3	4	39	36	36	0	4	0	40	23	7	23	21	19	38	4	5	11	0	6	6	11	11	8	10	6	0	0	5	8	6	2	4
28	16	24	3	1	23	19	19	0	2	0	21	9	1	15	12	19	38	4	5	11	0	6	6	11	11	8	10	4	0	0	3	4	4	2	4
29	16	24	3	1	23	19	19	0	2	0	21	9	1	15	12	19	38	4	5	11	0	6	6	11	11	8	10	4	0	0	3	4	4	2	4
30	16	24	3	1	23	19	19	0	2	0	21	9	1	15	12	19	38	4	5	11	0	6	6	11	11	8	10	4	0	0	3	4	4	2	4
31	24	32	3	15	31	28	28	0	16	0	43	49	37	19	17	19	38	4	5	11	0	6	6	11	11	8	10	18	0	0	17	28	15	2	4
32	24	32	3	15	31	28	28	0	16	0	43	49	37	19	17	19	38	4	5	11	0	6	6	11	11	8	10	18	0	0	17	28	15	2	4
33	24	32	3	15	31	28	28	0	16	0	43	49	37	19	17	19	38	4	5	11	0	6	6	11	11	8	10	18	0	0	17	28	15	2	4
34	24	32	3	15	31	28	28	0	16	0	43	49	37	19	17	19	38	4	5	11	0	6	6	11	11	8	10	18	0	0	17	28	15	2	4
35	88	100	4	33	107	102	102	0	34	0	163	135	91	54	51	29	59	7	8	16	1	6	6	12	11	8	10	38	0	0	38	66	32	7	6
36	88	96	3	22	95	92	104	0	22	0	125	98	54	53	49	24	44	6	5	15	1	9	10	19	19	12	18	27	0	0	25	40	21	2	4
37	74	108	12	10	101	77	85	0	12	0	98	55	18	44	43	21	41	6	5	13	0	6	6	11	11	8	10	10	0	0	10	16	10	8	13
38	74	81	3	10	80	77	77	0	11	0	102	61	24	44	41	19	38	4	5	11	0	8	8	11	11	12	10	13	0	0	12	19	11	2	4
39	45	53	3	5	51	48	48	0	5	0	59	32	9	29	27	19	38	4	5	11	0	6	6	11	11	8	10	7	0	0	6	10	7	2	4
40	76	84	3	14	139	136	136	0	14	0	155	127	89	45	42	19	38	4	5	11	0	6	6	11	11	8	10	38	0	0	37	63	30	24	4
41	76	84	3	7	139	136	136	0	7	0	149	110	72	45	42	19	38	4	5	11	0	6	6	11	11	8	10	31	0	0	30	51	25	24	4
42	98	105	3	21	161	158	158	0	21	0	206	157	108	56	53	19	38	4	5	11	0	6	6	11	11	8	10	45	0	0	44	75	35	24	4
43	47	55	3	25	54	51	129	0	25	0	111	87	63	31	28	19	38	4	5	11	0	6	6	11	11	8	10	28	0	0	27	45	22	2	4
44	47	55	3	31	54	54	132	0	31	0	120	87	63	40	37	78	101	20	20	35	2	27	29	60	60	30	57	51	0	0	41	55	36	2	6
45	47	55	3	27	54	54	132	0	28	0	117	87	63	40	34	66	92	20	11	35	2	27	29	60	60	30	57	48	0	0	38	49	33	2	6
46	58	75	6	47	72	61	157	0	47	0	152	147	118	36	34	19	38	4	5	12	0	6	6	11	11	8	10	48	0	0	47	82	38	4	7
47	33	41	3	32	39	36	36	0	32	0	118	97	80	23	21	19	38	4	5	11	0	6	6	11	11	8	10	34	0	0	33	57	27	2	4
48	16	24	3	1	23	19	19	0	2	0	21	9	1	15	12	19	38	4	5	11	0	6	6	11	11	8	10	4	0	0	3	4	4	2	4
49	16	24	3	1	23	19	19	0	2	0	21	9	1	15	12	19	38	4	5	11	0	6	6	11	11	8	10	4	0	0	3	4	4	2	4
50	16	24	3	1	23	19	19	0	2	0	21	9	1	15	12	19	38	4	5	11	0	6	6	11	11	8	10	4	0	0	3	4	4	2	4
51	16	24	3	1	23	19	19	0	2	0	21	9	1	15	12	19	38	4	5	11	0	6	6	11	11	8	10	4	0	0	3	4	4	2	4
52	16	24	3	1	23	19	19	0	2	0	21	9	1	15	12	19	38	4	5	11	0	6	6	11	11	8	10	4	0	0	3	4	4	2	4
53	156	304	3	126	353	371	371	0	126	0	547	380	302	150	186	334	364	85	76	224	8	148	156	393	393	152	470	321	0	0	296	300	214	75	19
54	156	304	3	116	327	345	345	0	116	0	511	354	276	150	177	334	364	85	76	214	8	148	156	383	383	152	444	302	0	0	270	274	199	65	19
55	148	274	3	113	302	321	321	0	113	0	483	325	251	146	172	334	364	85	76	214	8	148	156	383	383	152	444	292	0	0	261	258	192	59	19
56	148	274	3	113	302	321	321	0	113	0	483	325	251	146	172	334	364	85	76	214	8	148	156	383	383	152	444	292	0	0	261	258	192	59	19
57	233	401	25	161	387	360	484	0	164	0	629	438	330	186	235	344	394	86	82	226	9	148	156	386	386	152	446	321	0	0	292	316	219	61	42
58	216	385	25	117	371	343	419	0	121	0	498	315	216	177	226	344	394	86	82	226	9	148	156	386	386	152	446	277	0	0	249	240	186	61	42
59	231	399	25	111	410	380	456	0	114	0	529	334	227	178	210	334	364	86	76	218	8	148	156	385	384	152	445	281	0	0	252	244	187	70	41
60	159	327	25	105	293	263	339	0	108	0	406	253	182	142	168	312	348	86	60	218	8	148	156	385	384	152	445	258	0	0	229	203	169	53	41
61	219	387	25	109	353	322	398	0	112	0	496	426	326	168	250	216	274	76	7	175	8	133	141	323	322	138	336	250	0	0	208	237	167	53	40
62	204	372	25	80	339	307	383	0	83	0	436	368	275	161	233	216	274	76	7	165	8	133	141	313	312	138	310	221	0	0	173	195	145	53	40
63	204	419	40	87	375	309	391	0	93	0	449	378	285	161	236	216	275	77	7	168	8	133	141	314	313	138	311	224	0	0	177	203	149	63	55
64	226	440	40	101	397	331	461	0	106	0	506	424	320	171	247	216	275	77	7	168	8	133	141	314	313	138	311	237	0	0	191	226	159	63	55
65	148	278	3	68	243	260	260	0	69	0	368	324	250	141	209	216	274	76	7	161	8	133	141	311	311	138	308	213	0	0	163	176	136	36	18
66	292	442	21	183	421	406	406	0	186	0	658	499	370	223	414	393	499	109	161	240	10	178	188	435	434	183	455	369	0	0	313	375	249	58	43
67	232	349	12	138	331	330	330	0	140	0	520	384	282	178	338	328	423	85	161	176	8	136	143	321	321	140	321	285	0	0	237	302	194	46	29
68	253	344	12	133	334	331	331	0	134	0	533	405	292	182	330	284	369	76	117	160	7	122	128	289	288	126	290	261	0	0	218	280	178	39	27
69	203	294	12	116	284	281	281	0	117	0	438	335	247	157	305	284	369	76	117	160	7	122	128	289	288	126	290	244	0	0	201	250	165	39	27
70	469	540	25	239	599	585	585	0	242	0	894	648	494	272	539	431	569	124	127	353	12	207	218	572	571	274	700	493	0	0	469	495	341	107	51
71	453	554	25	215	591	577	577	0	218	0	843	607	446	279	532	431	569	124	127	339	12	207	218	558	557	224	664	461	0	0	429	451	317	99	51
72	388	649	21	222	609	602	602	0	225	0	891	655	490	283	533	431	569	124	127	337	12	207	218	556	555	224	658	476	0	0	442	478	328	103	48
73	338	598	21	205	559	552	552	0	208	0	796	585	445	258	508	431	569	124	127	337	12	207	218	556	555	224	658	459	0	0	425	448	315	103	48
74	321	581	21	176	541	534	534	0	179	0	749	501	370	247	394	427	559	124	125	334	12	207	218	555	554	224	658	430	0	0	396	397	292	103	47
75	321	581	21	176	541	534	534	0	179	0	749	501	370	247	394	427	559	124	125	334	12	207	218	555	554	224	658	430	0	0	396	397	292	103	47
76	319	483	21	176	470	462	462	0	179	0	677	431	300	246	393	427	559	124	125	334	12	207	218	555	554	224	658	404	0	0	369	351	272	76	47
77	348	512	21	190	498	491	491	0	193	0	740	490	345	260	430	427	559	124	125	331	12	207	218	552	551	212	649	417	0	0	381	378	283	76	47
78	247	411	21	155	397	386	386	0	158	0	573	350	255	204	314	417	530	124	119	323	12	207	218	550	549	212	648	383	0	0	346	314	254	75	46
79	276	439	21	135	470	462	462	0	138	0	628	409	300	224	309	435	533	140	66	336	13	218	230	578	577	224	674	389	0	0	348	308	257	93	48
80	276	439	21	126	441	433	433	0	129	0	591	380	271	224	301	399	508	144	43	336	13	218	230	578	577	224	674	369	0	0	328	273	242	82	48
81	303	437	21	125	461	452	452	0	128	0	609	399	291	222	299	399	508	144	43	336	13	218	230	578	577	224	674	377	0	0	336	287	248	90	48
82	191	360	12	122	344	354	354	0	123	0	505	326	244	187	268	360	460	116	38	309	11	217	211	526	526	210	622	341	0	0	306	255	224	67	36
83	310	534	28	188	534	529	529	0	191	0	748	457	345	278	382	573	752	339	140	484	19	344	357	861	860	346	985	554	0	0	476	407	358	113	66
84	277	418	28	156	441	423	423	0	159	0	583	335	241	222	337	444	586	249	106	390	14	247	260	664	663	253	793	427	0	0	387	315	280	91	57
85	277	418	28	224	441	425	425	0	228	0	653	335	241	229	408	696	786	278	286	405	15	261	275	697	696	267	824	507	0	0	462	435	338	91	58
86	169	320	12	219	310	316	316	0	220	0	536	258	186	167	369	567	634	230	286	308	10	176	185	500	499	181	634	415	0	0	403	396	284	62	34
87	169	320	12	221	310	319	319	0	222	0	542	258	186	177	374	600	674	242	288	332	11	206	214	549	548	210	683	435	0	0	413	398	295	62	36
88	169	320	12	180	310	319	319	0	182	0	501	258	186	177	333	448	565	242	179	332	11	206	211	549	548	202	684	395	0	0	371	325	264	62	36
89	169	320	12	155	310	317	317	0	157	0	474	258	186	170	306	348	474	219	111	319	11	183	193	519	519	188	658	358	0	0	345	282	239	62	35
90	191	342	12	181	360	367	367	0	182	0	550	297	215	181	342	384	512	261	167	323	11	183	193	523	523	188	668	394	0	0	384	343	267	73	35
91	74	162	3	117	140	159	159	0	117	0	276	140	104	109	225	221	327	160	77	232	8	126	133	365	365	130	472	244	0	0	239	185	164	26	19
92	74	162	3	181	140	161	161	0	181	0	342	140	104	116	291	243	418	168	182	246	8	252	194	397	397	162	542	320	0	0	268	257	218	26	21
93	74	162	3	174	140	162	162	0	175	0	337	140	104	119	286	251	423	84	140	252	9	339	194	411	411	162	544	320	0	0	271	255	217	26	21
94	16	24	3	155	23	41	41	0	156	0	197	9	1	80	188	234	373	84	127	239	8	339	194	408	408	162	543	278	0	0	229	178	182	2	19
95	16	24	3	155	23	24	24	0	156	0	179	9	1	28	171	69	182	24	127	113	2	225	74	146	146	46	290	182	0	0	179	178	132	2	7
96	16	24	3	170	23	25	25	0	171	0	196	9	1	32	187	76	203	26	166	123	3	235	84	168	168	56	311	205	0	0	198	204	148	2	8
97	16	24	3	183	23	23	23	0	183	0	206	9	1	26	198	55	165	18	173	134	2	153	44	161	161	42	322	206	0	0	247	230	151	2	7
98	16	24	3	203	23	23	23	0	203	0	226	9	1	26	217	55	185	18	187	134	2	188	94	161	161	42	373	225	0	0	216	214	166	2	7
99	16	24	3	85	23	22	22	0	86	0	108	9	1	23	99	44	121	14	108	60	1	87	49	79	79	27	149	102	0	0	88	100	75	2	6
100	16	24	3	1	23	19	19	0	2	0	21	9	1	15	12	19	38	4	5	11	0	6	6	11	11	8	10	4	0	0	3	4	4	2	4
101	16	24	3	1	23	19	19	0	2	0	21	9	1	15	12	19	38	4	5	11	0	6	6	11	11	8	10	4	0	0	3	4	4	2	4
102	16	24	3	1	23	19	19	0	2	0	21	9	1	15	12	19	38	4	5	11	0	6	6	11	11	8	10	4	0	0	3	4	4	2	4
103	16	24	3	1	23	19	19	0	2	0	21	9	1	15	12	19	38	4	5	11	0	6	6	11	11	8	10	4	0	0	3	4	4	2	4
104	16	24	3	1	23	19	19	0	2	0	21	9	1	15	12	19	38	4	5	11	0	6	6	11	11	8	10	4	0	0	3	4	4	2	4
105	23	215	3	127	163	174	174	0	127	0	301	146	134	60	155	167	311	117	190	140	5	205	143	247	247	102	328	256	0	0	195	245	176	53	14
106	23	215	3	102	163	173	173	0	102	0	275	146	134	59	130	166	285	117	178	138	5	116	107	242	242	97	290	229	0	0	202	234	156	53	14
107	23	215	3	108	163	174	174	0	109	0	282	146	134	60	137	167	293	117

Receptor	1	2	3	4	5	6	7	8	9	10	11	12	13	14	15	16	17	18	19	20	21	22	23	24	25	26	27	28	29	30	31	32	33	34	35
148	80	134	18	49	140	105	105	0	51	0	156	83	62	36	74	46	100	39	73	46	1	34	28	63	63	29	87	82	0	0	80	103	62	33	21
149	46	95	15	49	93	67	67	0	51	0	118	49	35	35	69	68	126	39	78	61	2	48	43	96	95	43	118	86	0	0	77	88	61	22	20
150	44	69	15	60	73	47	47	0	62	0	109	30	17	34	79	68	122	39	73	76	2	37	39	111	110	43	153	90	0	0	95	86	64	15	20
151	44	69	15	67	73	46	46	0	69	0	116	30	17	33	86	66	130	47	96	72	2	34	36	103	103	41	143	95	0	0	100	100	68	15	19
152	16	24	3	53	23	22	22	0	53	0	75	9	1	23	66	44	85	14	44	63	1	40	25	82	82	55	135	69	0	0	82	64	50	2	6
153	16	24	3	1	23	19	19	0	2	0	21	9	1	15	12	19	38	4	5	11	0	6	6	11	11	8	10	4	0	0	3	4	4	2	4
154	16	24	3	1	23	19	19	0	2	0	21	9	1	15	12	19	38	4	5	11	0	6	6	11	11	8	10	4	0	0	3	4	4	2	4
155	16	24	3	1	23	19	19	0	2	0	21	9	1	15	12	19	38	4	5	11	0	6	6	11	11	8	10	4	0	0	3	4	4	2	4
156	16	24	3	1	23	19	19	0	2	0	21	9	1	15	12	19	38	4	5	11	0	6	6	11	11	8	10	4	0	0	3	4	4	2	4
157	210	159	6	101	256	251	251	0	102	0	353	222	188	57	155	75	190	184	199	65	2	75	50	102	101	50	127	197	0	0	185	276	144	71	11
158	52	334	3	204	257	262	288	0	204	0	478	256	230	57	245	96	306	230	360	86	3	209	116	140	140	62	225	322	0	0	254	415	234	78	10
159	52	327	6	168	253	248	266	0	168	0	425	239	213	49	209	71	256	221	318	54	2	173	90	87	87	43	144	266	0	0	204	363	196	76	11
160	50	126	3	105	106	108	108	0	105	0	221	99	75	48	145	71	155	195	137	92	2	37	39	126	126	43	194	152	0	0	166	180	110	21	8
161	75	119	3	214	276	278	278	0	214	0	500	493	456	59	405	70	174	195	188	90	2	34	36	121	121	41	189	315	0	0	329	468	233	77	7
162	75	119	3	378	108	108	342	0	378	0	599	494	457	54	502	47	208	14	245	113	1	266	25	130	130	31	258	404	0	0	447	611	302	13	6
163	58	75	6	307	72	65	161	0	308	0	416	348	319	46	466	47	209	14	245	85	1	266	25	101	101	201	183	323	0	0	348	494	242	5	9
164	50	58	3	236	57	57	57	0	236	0	390	360	335	41	384	47	178	14	214	37	1	119	61	54	54	31	96	252	0	0	211	374	188	3	6
165	50	58	3	170	57	54	54	0	171	0	323	360	335	34	316	22	84	4	43	19	1	103	44	16	16	14	60	173	0	0	139	260	132	3	4
166	50	58	3	134	57	54	54	0	134	0	286	360	335	34	280	22	47	4	7	19	1	6	6	16	16	12	23	136	0	0	139	233	105	3	4
167	16	24	3	6	23	19	19	0	7	0	26	9	1	15	17	19	38	4	5	16	0	6	6	16	16	12	23	9	0	0	11	8	8	2	4
168	16	24	3	6	23	19	19	0	7	0	26	9	1	15	17	19	38	4	5	16	0	6	6	16	16	12	23	9	0	0	11	8	8	2	4
169	16	24	3	6	23	19	19	0	7	0	26	9	1	15	17	19	38	4	5	16	0	6	6	16	16	12	23	9	0	0	11	8	8	2	4
170	16	24	3	1	23	19	19	0	2	0	21	9	1	15	12	19	38	4	5	11	0	6	6	11	11	8	10	4	0	0	3	4	4	2	4
171	16	24	3	1	23	19	19	0	2	0	21	9	1	15	12	19	38	4	5	11	0	6	6	11	11	8	10	4	0	0	3	4	4	2	4
172	16	24	3	1	23	19	19	0	2	0	21	9	1	15	12	19	38	4	5	11	0	6	6	11	11	8	10	4	0	0	3	4	4	2	4
173	16	24	3	1	23	19	19	0	2	0	21	9	1	15	12	19	38	4	5	11	0	6	6	11	11	8	10	4	0	0	3	4	4	2	4
174	16	24	3	1	23	19	19	0	2	0	21	9	1	15	12	19	38	4	5	11	0	6	6	11	11	8	10	4	0	0	3	4	4	2	4
175	16	24	3	1	23	19	19	0	2	0	21	9	1	15	12	19	38	4	5	11	0	6	6	11	11	8	10	4	0	0	3	4	4	2	4
176	16	24	3	1	23	19	19	0	2	0	21	9	1	15	12	19	38	4	5	11	0	6	6	11	11	8	10	4	0	0	3	4	4	2	4
177	16	24	3	1	23	19	19	0	2	0	21	9	1	15	12	19	38	4	5	11	0	6	6	11	11	8	10	4	0	0	3	4	4	2	4
178	16	24	3	1	23	19	19	0	2	0	21	9	1	15	12	19	38	4	5	11	0	6	6	11	11	8	10	4	0	0	3	4	4	2	4
179	16	24	3	1	23	19	19	0	2	0	21	9	1	15	12	19	38	4	5	11	0	6	6	11	11	8	10	4	0	0	3	4	4	2	4
180	16	24	3	1	23	19	19	0	2	0	21	9	1	15	12	19	38	4	5	11	0	6	6	11	11	8	10	4	0	0	3	4	4	2	4
181	16	24	3	1	23	19	19	0	2	0	21	9	1	15	12	19	38	4	5	11	0	6	6	11	11	8	10	4	0	0	3	4	4	2	4
182	16	24	3	1	23	19	19	0	2	0	21	9	1	15	12	19	38	4	5	11	0	6	6	11	11	8	10	4	0	0	3	4	4	2	4
183	16	24	3	1	23	19	19	0	2	0	21	9	1	15	12	19	38	4	5	11	0	6	6	11	11	8	10	4	0	0	3	4	4	2	4
184	16	24	3	1	23	19	19	0	2	0	21	9	1	15	12	19	38	4	5	11	0	6	6	11	11	8	10	4	0	0	3	4	4	2	4
185	16	24	3	1	23	19	19	0	2	0	21	9	1	15	12	19	38	4	5	11	0	6	6	11	11	8	10	4	0	0	3	4	4	2	4
186	16	24	3	1	23	19	19	0	2	0	21	9	1	15	12	19	38	4	5	11	0	6	6	11	11	8	10	4	0	0	3	4	4	2	4
187	16	24	3	1	23	19	19	0	2	0	21	9	1	15	12	19	38	4	5	11	0	6	6	11	11	8	10	4	0	0	3	4	4	2	4
188	16	24	3	1	23	19	19	0	2	0	21	9	1	15	12	19	38	4	5	11	0	6	6	11	11	8	10	4	0	0	3	4	4	2	4
189	16	24	3	1	23	19	19	0	2	0	21	9	1	15	12	19	38	4	5	11	0	6	6	11	11	8	10	4	0	0	3	4	4	2	4
190	16	24	3	1	23	19	19	0	2	0	21	9	1	15	12	19	38	4	5	11	0	6	6	11	11	8	10	4	0	0	3	4	4	2	4
191	16	24	3	1	23	19	19	0	2	0	21	9	1	15	12	19	38	4	5	11	0	6	6	11	11	8	10	4	0	0	3	4	4	2	4
192	16	24	3	1	23	19	19	0	2	0	21	9	1	15	12	19	38	4	5	11	0	6	6	11	11	8	10	4	0	0	3	4	4	2	4
193	16	24	3	1	23	19	19	0	2	0	21	9	1	15	12	19	38	4	5	11	0	6	6	11	11	8	10	4	0	0	3	4	4	2	4
194	16	24	3	1	23	19	19	0	2	0	21	9	1	15	12	19	38	4	5	11	0	6	6	11	11	8	10	4	0	0	3	4	4	2	4
195	16	24	3	1	23	19	19	0	2	0	21	9	1	15	12	19	38	4	5	11	0	6	6	11	11	8	10	4	0	0	3	4	4	2	4
196	16	24	3	1	23	19	19	0	2	0	21	9	1	15	12	19	38	4	5	11	0	6	6	11	11	8	10	4	0	0	3	4	4	2	4
197	16	24	3	1	23	19	19	0	2	0	21	9	1	15	12	19	38	4	5	11	0	6	6	11	11	8	10	4	0	0	3	4	4	2	4
198	16	24	3	1	23	19	19	0	2	0	21	9	1	15	12	19	38	4	5	11	0	6	6	11	11	8	10	4	0	0	3	4	4	2	4
199	16	24	3	1	23	19	19	0	2	0	21	9	1	15	12	19	38	4	5	11	0	6	6	11	11	8	10	4	0	0	3	4	4	2	4
200	16	24	3	1	23	19	19	0	2	0	21	9	1	15	12	19	38	4	5	11	0	6	6	11	11	8	10	4	0	0	3	4	4	2	4
201	16	24	3	1	23	19	19	0	2	0	21	9	1	15	12	19	38	4	5	11	0	6	6	11	11	8	10	4	0	0	3	4	4	2	4
202	16	24	3	1	23	19	19	0	2	0	21	9	1	15	12	19	38	4	5	11	0	6	6	11	11	8	10	4	0	0	3	4	4	2	4
203	16	24	3	1	23	19	19	0	2	0	21	9	1	15	12	19	38	4	5	11	0	6	6	11	11	8	10	4	0	0	3	4	4	2	4
204	16	24	3	1	23	19	19	0	2	0	21	9	1	15	12	19	38	4	5	11	0	6	6	11	11	8	10	4	0	0	3	4	4	2	4

AAWT (divided by 5 working days)

Receptor	1	2	3	4	5	6	7	8	9	10	11	12	13	14	15	16	17	18	19	20	21	22	23	24	25	26	27	28	29	30	31	32	33	34	35
Year 1 (Weeks 0-47)	6	14	1	3	13	12	13	0	3	0	16	11	8	5	6	5	10	1	4	3	0	2	2	3	3	2	4	6	0	0	5	8	4	2	1
Year 2 (Weeks 53-99)	41	69	3	31	68	67	70	0	31	0	104	66	49	35	60	67	87	24	23	51	2	38	36	87	87	34	105	67	0	0	60	59	45	12	7
Year 3 (Weeks 105-152)	4	11	1	25	10	11	11	0	25	0	36	6	5	10	29	28	50	16	33	30	1	23	19	48	48	23	65	40	0	0	39	35	27	2	3
Year 4 (Weeks 157-204)	6	10	1	9	10	9	11	0	9	0	20	15	12	4	15	5	13	5	9	5	0	6	3	5	5	4	8	11	0	0	11	16	9	2	1

AADT (divided by 7 days)

Receptor	1	2	3	4	5	6	7	8	9	10	11	12	13	14	15	16	17	18	19	20	21	22	23	24	25	26	27	28	29	30	31	32	33	34	35
Year 1 (Weeks 0-47)	5	10	0	2	9	8	10	0	2	0	12	8	6	3	4	3	7	1	3	2	0	1	1	2	2	1	3	4	0	0	4	6	3	2	1
Year 2 (Weeks 53-99)	30	49	2	22	48	48	50	0	22	0	74	47	35	25	43	48	62	17	16	37	1	27	25	62	62	25	75	48	0	0	43	42	32	9	5
Year 3 (Weeks 105-152)	3	8	1	18	7	8	8	0	18	0	26	5	3	7	21	20	35	12	24	21	1	16	14	34	34	16	47	28	0	0	28	25	19	2	2
Year 4 (Weeks 157-204)	4	7	0	6	7	7	8	0	6	0	14	11	9	3	11	4	10	4	6	3	0	5	2	4	4	3	6	8	0	0	8	11	6	1	1

Total Peak Week																					
Receptor	A (76)	B (76)	C (64)	D (68)	E (41)	F (27)	G (23)	H (21)	I (23)	J (26)	K (30)	L (69)	M (58)	N (51)	O (16)	P (15)	Q (7)	R (2)	S (3)	T (3)	U (42)
Week																					
0	1	1	11	4	11	10	6	0	6	8	0	8	3	0	19	12	19	24	3	3	2
1	1	1	11	4	11	10	6	0	6	8	0	8	3	0	19	12	19	24	3	3	2
2	1	1	11	4	11	10	6	0	6	8	0	8	3	0	19	12	19	24	3	3	2
3	1	1	11	4	11	10	6	0	6	8	0	8	3	0	19	12	19	24	3	3	2
4	1	1	11	4	11	10	6	0	6	8	0	8	3	0	19	12	19	24	3	3	2
5	1	1	11	4	11	10	6	0	6	8	0	8	3	0	19	12	19	24	3	3	2
6	1	1	11	4	11	10	6	0	6	8	0	8	3	0	19	12	19	24	3	3	2
7	1	1	11	4	11	10	6	0	6	8	0	8	3	0	19	12	19	24	3	3	2
8	1	1	11	4	11	10	6	0	6	8	0	8	3	0	19	12	19	24	3	3	2
9	3	3	35	10	35	33	17	1	17	19	0	20	8	0	35	58	175	233	3	3	7
10	2	2	27	8	27	26	14	1	14	15	0	16	6	0	29	46	145	193	3	3	5
11	2	2	27	8	27	26	14	1	14	15	0	16	6	0	29	46	145	193	3	3	5
12	2	2	27	8	27	26	14	1	14	15	0	16	6	0	29	46	145	193	3	3	5
13	2	2	27	8	27	26	14	1	14	15	0	16	6	0	29	46	145	193	3	3	5
14	2	2	27	8	27	26	14	1	14	15	0	16	6	0	29	46	145	193	3	3	5
15	2	2	27	8	27	26	14	1	14	15	0	16	6	0	29	46	145	193	3	3	5
16	2	2	27	8	27	26	14	1	14	15	0	16	6	0	29	46	145	193	3	3	5
17	1	1	11	4	11	10	6	0	6	8	0	8	3	0	19	12	19	24	3	3	2
18	1	1	11	4	11	10	6	0	6	8	0	8	3	0	19	12	19	24	3	3	2
19	1	1	28	4	28	55	6	0	6	8	0	8	3	0	19	30	19	24	3	3	2
20	1	1	18	4	18	29	6	0	6	8	0	8	3	0	19	20	19	24	3	3	2
21	1	1	18	4	18	29	6	0	6	8	0	8	3	0	19	20	19	24	3	3	2
22	1	1	18	4	18	29	6	0	6	8	0	8	3	0	19	20	19	24	3	3	2
23	1	1	18	4	18	29	6	0	6	8	0	8	3	0	19	20	19	24	3	3	2
24	1	1	18	4	18	29	6	0	6	8	0	8	3	0	19	20	19	24	3	3	2
25	1	1	18	4	18	29	6	0	6	8	0	8	3	0	19	20	19	24	3	3	2
26	1	1	28	4	28	55	6	0	6	8	0	8	3	0	19	30	19	24	3	3	2
27	1	1	11	4	11	10	6	0	6	8	0	8	3	0	19	21	36	41	3	3	2
28	1	1	11	4	11	10	6	0	6	8	0	8	3	0	19	12	19	24	3	3	2
29	1	1	11	4	11	10	6	0	6	8	0	8	3	0	19	12	19	24	3	3	2
30	1	1	11	4	11	10	6	0	6	8	0	8	3	0	19	12	19	24	3	3	2
31	1	1	11	4	11	10	6	0	6	8	0	8	3	0	19	17	28	32	3	3	2
32	1	1	11	4	11	10	6	0	6	8	0	8	3	0	19	17	28	32	3	3	2
33	1	1	11	4	11	10	6	0	6	8	0	8	3	0	19	17	28	32	3	3	2
34	1	1	11	4	11	10	6	0	6	8	0	8	3	0	19	17	28	32	3	3	2
35	2	2	12	7	12	10	6	1	6	8	0	13	3	0	29	51	102	100	4	4	2
36	2	2	19	6	19	18	10	1	10	12	0	12	4	0	24	49	104	96	3	3	4
37	1	1	11	6	12	10	6	0	6	8	0	11	3	0	21	43	85	108	12	12	2
38	1	1	11	4	13	10	8	0	8	12	0	8	3	0	19	41	77	81	3	3	2
39	1	1	11	4	11	10	6	0	6	8	0	8	3	0	19	27	48	53	3	3	2
40	1	1	11	4	11	10	6	0	6	8	0	8	3	0	19	42	136	84	3	3	2
41	1	1	11	4	11	10	6	0	6	8	0	8	3	0	19	42	136	84	3	3	2
42	1	1	11	4	11	10	6	0	6	8	0	8	3	0	19	53	158	105	3	3	2
43	1	1	11	4	11	10	6	0	6	8	0	8	3	0	19	28	129	55	3	3	2
44	4	4	60	19	58	57	29	2	29	30	0	38	13	0	78	37	132	55	3	3	11
45	4	4	60	19	58	57	29	2	29	30	0	38	13	0	66	34	132	55	3	3	11
46	1	1	11	4	11	10	6	0	6	8	0	8	3	0	19	34	157	75	6	6	2
47	1	1	11	4	11	10	6	0	6	8	0	8	3	0	19	21	36	41	3	3	2
48	1	1	11	4	11	10	6	0	6	8	0	8	3	0	19	12	19	24	3	3	2
49	1	1	11	4	11	10	6	0	6	8	0	8	3	0	19	12	19	24	3	3	2
50	1	1	11	4	11	10	6	0	6	8	0	8	3	0	19	12	19	24	3	3	2
51	1	1	11	4	11	10	6	0	6	8	0	8	3	0	19	12	19	24	3	3	2
52	1	1	11	4	11	10	6	0	6	8	0	8	3	0	19	12	19	24	3	3	2
53	20	20	393	78	380	470	156	8	156	152	0	162	72	0	334	186	371	304	3	3	64
54	20	20	383	78	370	444	156	8	156	152	0	162	72	0	334	177	345	304	3	3	64
55	20	20	383	78	370	444	156	8	156	152	0	162	72	0	334	172	321	274	3	3	64
56	20	20	383	78	370	444	156	8	156	152	0	162	72	0	334	172	321	274	3	3	64
57	21	21	386	78	371	446	156	9	156	152	0	163	73	0	344	235	484	401	25	25	65
58	21	21	386	78	371	446	156	9	156	152	0	163	73	0	344	226	419	385	25	25	65
59	20	20	385	78	370	445	156	8	156	152	0	163	72	0	334	210	456	399	25	25	65
60	20	20	385	78	370	445	156	8	156	152	0	163	72	0	312	168	339	327	25	25	65
61	18	18	323	69	309	336	141	8	141	138	0	145	65	0	216	250	398	387	25	25	59
62	18	18	313	69	299	310	141	8	141	138	0	145	65	0	216	233	383	372	25	25	59
63	19	19	314	69	300	311	141	8	141	138	0	145	65	0	216	236	391	419	40	40	59
64	19	19	314	69	300	311	141	8	141	138	0	145	65	0	216	247	461	440	40	40	59
65	18	18	311	69	299	308	141	8	141	138	0	145	65	0	216	209	260	278	3	3	58
66	25	25	435	100	416	455	188	10	188	183	0	208	88	0	393	414	406	442	21	21	78
67	19	19	321	78	307	321	143	8	143	140	0	162	67	0	328	338	330	349	12	12	60
68	18	18	289	70	276	290	128	7	128	126	0	144	60	0	284	330	331	344	12	12	53
69	18	18	289	70	276	290	128	7	128	126	0	144	60	0	284	305	281	294	12	12	53
70	30	30	572	114	548	700	218	12	218	274	0	236	104	0	431	539	585	540	25	25	92
71	30	30	558	114	534	664	218	12	218	224	0	236	104	0	431	532	577	554	25	25	92
72	30	30	556	114	532	658	218	12	218	224	0	236	104	0	431	533	602	649	21	21	91
73	30	30	556	114	532	658	218	12	218	224	0	236	104	0	431	508	552	598	21	21	91
74	30	30	555	114	532	658	218	12	218	224	0	236	103	0	427	394	534	581	21	21	91
75	30	30	555	114	532	658	218	12	218	224	0	236	103	0	427	394	534	581	21	21	91
76	30	30	555	114	532	658	218	12	218	224	0	236	103	0	427	393	462	483	21	21	91
77	30	30	552	114	529	649	218	12	218	212	0	236	103	0	427	430	491	512	21	21	91
78	29	29	550	113	528	648	218	12	218	212	0	236	102	0	417	314	386	411	21	21	91
79	31	31	578	121	554	674	230	13	230	224	0	251	108	0	435	309	462	439	21	21	96
80	31	31	578	121	554	674	230	13	230	224	0	257	108	0	399	301	433	439	21	21	96
81	31	31	578	121	554	674	230	13	230	224	0	257	108	0	399	299	452	437	21	21	96
82	28	28	526	106	509	622	211	11	211	210	0	221	114	0	360	268	354	360	12	12	87
83	46	46	861	179	833	985	357	19	357	346	0	405	173	0	573	382	529	534	28	28	146
84	34	34	664	136	638	793	260	14	260	253	0	293	122	0	444	337	423	418	28	28	109
85	36	36	697	145	669	824	275	15	275	267	0	361	129	0	696	408	425	418	28	28	115
86	25	25	500	101	481	634	185	10	185	181	0	270	87	0	567	369	316	320	12	12	77
87	28	28	549	112	534	683	214	11	214	210	0	293	104	0	600	374	319	320	12	12	87
88	28	28	549	112	531	684	211	11	211	202	0	293	107	0	448	333	319	320	12	12	87
89	26	26	519	104	500	658	193	11	193	188	0	268	91	0	348	306	317	320	12	12	80
90	26	26	523	104	504	668	193	11	193	188	0	289	91	0	384	342	367	342	12	12	80
91	18	18	365	68	352	472	133	8	133	130	0	183	63	0	221	225	159	162	3	3	55
92	20	20	397	75	427	542	194	8	194	162	0	198	177	0	243	291	161	162	3	3	62
93	21	21	411	77	434	544	194	9	194	162	0	160	260	0	251	286	162	162	3	3	65
94	20	20	408	76	433	543	194	8	194	162	0	160	259	0	234	188	41	24	3	3	64
95	5	5	146	22	182	290	74	2	74	46	0	46	203	0	69	171	24	24	3	3	14
96	6	6	168	24	203	311	84	3	84	56	0	49	207	0	76	187	25	24	3	3	19
97	4	4	161	16	172	322	44	2	44	42	0	34	132	0	55	198	23	24	3	3	12
98	4	4	161	16	223	373	94	2	94	42	0	34	168	0	55	217	23	24	3	3	12
99	3	3	79	13	103	149	49	1	49	27	0	26	74	0	44	99	22	24	3	3	9
100	1	1	11	4	11	10	6	0	6	8	0	8	3	0	19	12	19	24	3	3	2
101	1	1	11	4	11	10	6	0	6	8	0	8	3	0	19	12	19	24	3	3	2
102	1	1	11	4	11	10	6	0	6	8	0	8	3	0	19	12	19	24	3	3	2
103	1	1	11	4	11	10	6	0	6	8	0	8	3	0	19	12	19	24	3	3	2
104	1	1	11	4	11	10	6	0	6	8	0	8	3	0	19	12	19	24	3	3	2
105	13	13	247	56	281	328	143	5	143	102	0	116	155	0	167	155	174	215	3	3	41
106	13	13	242	56	242	290	107	5	107	97	0	116	69	0	166	130	173	215	3	3	40
107	13	13	247	56	248	295	110	5	110	99	0	116	70	0	167	137	174	215	3	3	41
108	13	13	246	56	246	291	110	5	110	185	0	116	70	0	167	135	174	215	3	3	41
109	15	15	295	58	312	393	140	6	140	197	0	122	122	0	178	194	175	215	3	3	46
110	18	18	377	74	391	516	165	7	165	135	0	186	134	0	221	246	179	215	3	3	57
111	18	18	377	74	399	524	173	7	173	135	0	186	155	0	221	266	179	215	3	3	57
112	14	14	311	60	320	444	126	6	126	106	0	156	96	0	178	224	34	24	3	3	44
113	19	19	437	80	442	622	168	8	168	189	0	199	116	0	238	303	40	24	3	3	62
114	23	23	493	94	495	659	198	10	198	182	0	229	130	0	281	277	45	24	3	3	74
115	23	23	493	94	495	659	198	10	198	182	0	229	130	0	281	277	45	24	3	3	74
116	23	23	493	94	495	659	198	10	198	182	0	229	130	0	281	288	45	24	3	3	74
117	19	19	444	80	430	620	151	8	151	153	0	199	70	0	238	265	40	24	3	3	62
118	22	22	447	91	432	549	173	9	173	175	0	222	80	0	271	212	44	24	3	3	71
119	20	20	415	84	401	517	158	8	158	160	0	203	73	0	249	198	41	24	3	3	65
120	20	20	415	84	401	517	158	8	158	160	0	203	73	0	249	208	41	24	3	3	65
121	16	16	349	69	338	453	128	7	128	130	0	172	59	0	206	186	37	24	3	3	53
122	18	18	391	84	379	529	138	7	138	215	0	202	64	0	240	225	39	24	3	3	57
123	18	18	391	84	379	529	138	7	138	215	0	202	64	0	240	214	39	24	3	3	57
124	15	15	449	62	445	752	124	6	124	208	0	129	121	0	187	297	36	24	3	3	48
125	15	15	418	62	414	671	124	6	124	334	0	129	121	0	187	273	36	24	3	3	48
126	11	11	274	48	273	402	94	5	94	189	0	99	107	0	144	173	31	24	3	3	36
127	11	11	271	48	270	395	94	5	94	191	0	99	107	0	144	170	31	24	3	3	36
128	11	11	271	48	270	395	94	5	94	191	0	99	107	0	144	170	31	24	3	3	36
129	11	11	271	48	270	395	94	5	94	191	0	99	107	0	144	180	31	24	3	3	36
130	9	9	201	33	202	292	72	4	72	94	0	69	96	0	105	139	28	24	3	3	27
131	9	9	201	33	202	292	72	4	72	94	0	69	96	0	105	139	28	24	3	3	27
132	9	9	200	33	219	308	90	4	90	94	0	69	78	0	105	138	28	24	3	3	27
133	9	9	200	33	219	308	90	4	90	94	0	69	78	0	105	138	28	24	3	3	27
134	9	9	176	33	195	245	90	4	90	88	0	69	78	0	105	114	28	24	3	3	27
135	9	9	176	33	195	245	90	4	90	88	0	69	78	0	105	114	28	24	3	3	27
136	9	9	176	33	195	245	90	4	90	88	0	69	78	0	105	114	28	24	3	3	27
137	9	9	176	33	195	245	90	4	90	88	0	69	78	0	105	114	28	24	3	3	27
138	9	9	154	33	149	168	66	4	66	76	0	69	30	0	105	74	28	24	3	3	27
139	9	9	147	33	141	149	66	4	66	70	0	69	30	0	105	66	28	24	3	3	27
140	1	1	16	4	16	23	6	0	6	12	0	8	3	0	19	17	19	24	3	3	2
141	1	1	16	4	16	23	6	0	6	12	0	8	3	0	19	17	19	24	3	3	2
142	1	1	16	4	16	23	6	0	6	12	0	8	3	0	19	17	19	24	3	3	2
143	1	1	16	4	16	23	6	0	6	12	0	8	3	0	19	17	19	24	3	3	2
144	1	1	16	4	16	23	6	0	6	12	0	8	3	0	19	17	19	24	3	3	2
145	1	1	16	4	16	23	6	0	6	12	0	8	3	0	19	17	19	24	3	3	2
146	1	1	16	4	16	23	6	0	6	12	0	8	3	0	19	17	19	24	3	3	2
147	1	1	16	4	16	23	6	0	6	12	0	8	3	0	19	17	19	24	3	3	2

Receptor	A (76)	B (76)	C (64)	D (68)	E (41)	F (27)	G (23)	H (21)	I (23)	J (26)	K (30)	L (69)	M (58)	N (51)	O (16)	P (15)	Q (7)	R (2)	S (3)	T (3)	U (42)
148	4	4	63	14	66	87	28	1	28	29	0	28	22	0	46	74	105	134	18	18	10
149	5	5	96	21	97	118	43	2	43	43	0	52	29	0	68	69	67	95	15	15	16
150	5	5	111	21	108	153	39	2	39	43	0	52	18	0	68	79	47	69	15	15	16
151	5	5	103	21	101	143	36	2	36	41	0	56	17	0	66	86	46	69	15	15	15
152	3	3	82	13	83	135	25	1	25	55	0	26	27	0	44	66	22	24	3	3	9
153	1	1	11	4	11	10	6	0	6	8	0	8	3	0	19	12	19	24	3	3	2
154	1	1	11	4	11	10	6	0	6	8	0	8	3	0	19	12	19	24	3	3	2
155	1	1	11	4	11	10	6	0	6	8	0	8	3	0	19	12	19	24	3	3	2
156	1	1	11	4	11	10	6	0	6	8	0	8	3	0	19	12	19	24	3	3	2
157	6	6	102	23	107	127	50	2	50	50	0	46	52	0	75	155	251	159	6	6	17
158	8	8	140	30	195	225	116	3	116	62	0	160	181	0	96	245	288	334	3	3	23
159	6	6	87	21	136	144	90	2	90	43	0	143	154	0	71	209	266	327	6	6	16
160	6	6	126	21	123	194	39	2	39	43	0	130	18	0	71	145	108	126	3	3	16
161	5	5	121	21	118	189	36	2	36	41	0	129	17	0	70	405	278	119	3	3	15
162	4	4	130	13	130	258	25	1	25	31	0	26	253	0	47	502	342	119	3	3	9
163	4	4	101	13	101	183	25	1	25	201	0	26	253	0	47	466	161	75	6	6	10
164	4	4	54	13	91	96	61	1	61	31	0	26	107	0	47	384	57	58	3	3	9
165	1	1	16	5	54	60	44	1	44	14	0	8	98	0	22	316	54	58	3	3	2
166	1	1	16	5	16	23	6	1	6	12	0	8	3	0	22	280	54	58	3	3	2
167	1	1	16	4	16	23	6	0	6	12	0	8	3	0	19	17	19	24	3	3	2
168	1	1	16	4	16	23	6	0	6	12	0	8	3	0	19	17	19	24	3	3	2
169	1	1	16	4	16	23	6	0	6	12	0	8	3	0	19	17	19	24	3	3	2
170	1	1	11	4	11	10	6	0	6	8	0	8	3	0	19	12	19	24	3	3	2
171	1	1	11	4	11	10	6	0	6	8	0	8	3	0	19	12	19	24	3	3	2
172	1	1	11	4	11	10	6	0	6	8	0	8	3	0	19	12	19	24	3	3	2
173	1	1	11	4	11	10	6	0	6	8	0	8	3	0	19	12	19	24	3	3	2
174	1	1	11	4	11	10	6	0	6	8	0	8	3	0	19	12	19	24	3	3	2
175	1	1	11	4	11	10	6	0	6	8	0	8	3	0	19	12	19	24	3	3	2
176	1	1	11	4	11	10	6	0	6	8	0	8	3	0	19	12	19	24	3	3	2
177	1	1	11	4	11	10	6	0	6	8	0	8	3	0	19	12	19	24	3	3	2
178	1	1	11	4	11	10	6	0	6	8	0	8	3	0	19	12	19	24	3	3	2
179	1	1	11	4	11	10	6	0	6	8	0	8	3	0	19	12	19	24	3	3	2
180	1	1	11	4	11	10	6	0	6	8	0	8	3	0	19	12	19	24	3	3	2
181	1	1	11	4	11	10	6	0	6	8	0	8	3	0	19	12	19	24	3	3	2
182	1	1	11	4	11	10	6	0	6	8	0	8	3	0	19	12	19	24	3	3	2
183	1	1	11	4	11	10	6	0	6	8	0	8	3	0	19	12	19	24	3	3	2
184	1	1	11	4	11	10	6	0	6	8	0	8	3	0	19	12	19	24	3	3	2
185	1	1	11	4	11	10	6	0	6	8	0	8	3	0	19	12	19	24	3	3	2
186	1	1	11	4	11	10	6	0	6	8	0	8	3	0	19	12	19	24	3	3	2
187	1	1	11	4	11	10	6	0	6	8	0	8	3	0	19	12	19	24	3	3	2
188	1	1	11	4	11	10	6	0	6	8	0	8	3	0	19	12	19	24	3	3	2
189	1	1	11	4	11	10	6	0	6	8	0	8	3	0	19	12	19	24	3	3	2
190	1	1	11	4	11	10	6	0	6	8	0	8	3	0	19	12	19	24	3	3	2
191	1	1	11	4	11	10	6	0	6	8	0	8	3	0	19	12	19	24	3	3	2
192	1	1	11	4	11	10	6	0	6	8	0	8	3	0	19	12	19	24	3	3	2
193	1	1	11	4	11	10	6	0	6	8	0	8	3	0	19	12	19	24	3	3	2
194	1	1	11	4	11	10	6	0	6	8	0	8	3	0	19	12	19	24	3	3	2
195	1	1	11	4	11	10	6	0	6	8	0	8	3	0	19	12	19	24	3	3	2
196	1	1	11	4	11	10	6	0	6	8	0	8	3	0	19	12	19	24	3	3	2
197	1	1	11	4	11	10	6	0	6	8	0	8	3	0	19	12	19	24	3	3	2
198	1	1	11	4	11	10	6	0	6	8	0	8	3	0	19	12	19	24	3	3	2
199	1	1	11	4	11	10	6	0	6	8	0	8	3	0	19	12	19	24	3	3	2
200	1	1	11	4	11	10	6	0	6	8	0	8	3	0	19	12	19	24	3	3	2
201	1	1	11	4	11	10	6	0	6	8	0	8	3	0	19	12	19	24	3	3	2
202	1	1	11	4	11	10	6	0	6	8	0	8	3	0	19	12	19	24	3	3	2
203	1	1	11	4	11	10	6	0	6	8	0	8	3	0	19	12	19	24	3	3	2
204	1	1	11	4	11	10	6	0	6	8	0	8	3	0	19	12	19	24	3	3	2

AAWT (divided by 5 working days)

Receptor	A (76)	B (76)	C (64)	D (68)	E (41)	F (27)	G (23)	H (21)	I (23)	J (26)	K (30)	L (69)	M (58)	N (51)	O (16)	P (15)	Q (7)	R (2)	S (3)	T (3)	U (42)
Year 1 (Weeks 0-47)	0	0	3	1	4	4	2	0	2	2	0	2	1	0	5	6	13	14	1	1	1
Year 2 (Weeks 53-99)	5	5	87	18	85	105	36	2	36	34	0	39	21	0	67	60	70	69	3	3	14
Year 3 (Weeks 105-152	2	2	48	9	48	65	19	1	19	23	0	21	14	0	28	29	11	11	1	1	7
Year 4 (Weeks 157-204	0	0	5	1	6	8	3	0	3	4	0	4	5	0	5	15	11	10	1	1	1

AADT (divided by 7 days)

Receptor	A (76)	B (76)	C (64)	D (68)	E (41)	F (27)	G (23)	H (21)	I (23)	J (26)	K (30)	L (69)	M (58)	N (51)	O (16)	P (15)	Q (7)	R (2)	S (3)	T (3)	U (42)
Year 1 (Weeks 0-47)	0	0	2	1	3	3	1	0	1	1	0	2	1	0	3	4	10	10	0	0	0
Year 2 (Weeks 53-99)	3	3	62	13	61	75	25	1	25	25	0	28	15	0	48	43	50	49	2	2	10
Year 3 (Weeks 105-152	2	2	34	7	34	47	14	1	14	16	0	15	10	0	20	21	8	8	1	1	5
Year 4 (Weeks 157-204	0	0	4	1	5	6	2	0	2	3	0	3	4	0	4	11	8	7	0	0	1

HGV Peak Week																																		
Receptor	1	2	3	4	5	6	7	8	9	10	11	12	13	14	15	16	17	18	19	20	21	22	23	24	25	26	27	28	29	30	31	32	33	34	35
Week																																			
0	0	0	0	0	0	0	0	0	0	0	0	0	0	0	0	0	0	0	0	0	0	0	0	0	0	0	0	0	0	0	0	0	0	0	0
1	0	0	0	0	0	0	0	0	0	0	0	0	0	0	0	0	0	0	0	0	0	0	0	0	0	0	0	0	0	0	0	0	0	0	0
2	0	0	0	0	0	0	0	0	0	0	0	0	0	0	0	0	0	0	0	0	0	0	0	0	0	0	0	0	0	0	0	0	0	0	0
3	0	0	0	0	0	0	0	0	0	0	0	0	0	0	0	0	0	0	0	0	0	0	0	0	0	0	0	0	0	0	0	0	0	0	0
4	0	0	0	0	0	0	0	0	0	0	0	0	0	0	0	0	0	0	0	0	0	0	0	0	0	0	0	0	0	0	0	0	0	0	0
5	0	0	0	0	0	0	0	0	0	0	0	0	0	0	0	0	0	0	0	0	0	0	0	0	0	0	0	0	0	0	0	0	0	0	0
6	0	0	0	0	0	0	0	0	0	0	0	0	0	0	0	0	0	0	0	0	0	0	0	0	0	0	0	0	0	0	0	0	0	0	0
7	0	0	0	0	0	0	0	0	0	0	0	0	0	0	0	0	0	0	0	0	0	0	0	0	0	0	0	0	0	0	0	0	0	0	0
8	0	0	0	0	0	0	0	0	0	0	0	0	0	0	0	0	0	0	0	0	0	0	0	0	0	0	0	0	0	0	0	0	0	0	0
9	0	198	0	39	143	143	143	0	39	0	182	143	143	0	39	0	39	0	101	0	0	0	0	0	0	0	0	93	0	0	93	163	70	55	0
10	0	162	0	29	117	117	117	0	29	0	146	117	117	0	29	0	29	0	75	0	0	0	0	0	0	0	0	73	0	0	73	128	55	45	0
11	0	162	0	29	117	117	117	0	29	0	146	117	117	0	29	0	29	0	75	0	0	0	0	0	0	0	0	73	0	0	73	128	55	45	0
12	0	162	0	29	117	117	117	0	29	0	146	117	117	0	29	0	29	0	75	0	0	0	0	0	0	0	0	73	0	0	73	128	55	45	0
13	0	162	0	29	117	117	117	0	29	0	146	117	117	0	29	0	29	0	75	0	0	0	0	0	0	0	0	73	0	0	73	128	55	45	0
14	0	162	0	29	117	117	117	0	29	0	146	117	117	0	29	0	29	0	75	0	0	0	0	0	0	0	0	73	0	0	73	128	55	45	0
15	0	162	0	29	117	117	117	0	29	0	146	117	117	0	29	0	29	0	75	0	0	0	0	0	0	0	0	73	0	0	73	128	55	45	0
16	0	162	0	29	117	117	117	0	29	0	146	117	117	0	29	0	29	0	75	0	0	0	0	0	0	0	0	73	0	0	73	128	55	45	0
17	0	0	0	0	0	0	0	0	0	0	0	0	0	0	0	0	0	0	0	0	0	0	0	0	0	0	0	0	0	0	0	0	0	0	0
18	0	0	0	0	0	0	0	0	0	0	0	0	0	0	0	0	0	0	0	0	0	0	0	0	0	0	0	0	0	0	0	0	0	0	0
19	0	0	0	17	0	0	0	0	17	0	17	0	0	0	17	0	0	0	0	17	0	0	0	17	17	0	45	17	0	0	28	15	13	0	0
20	0	0	0	7	0	0	0	0	7	0	7	0	0	0	7	0	0	0	0	7	0	0	0	7	7	0	19	7	0	0	12	6	5	0	0
21	0	0	0	7	0	0	0	0	7	0	7	0	0	0	7	0	0	0	0	7	0	0	0	7	7	0	19	7	0	0	12	6	5	0	0
22	0	0	0	7	0	0	0	0	7	0	7	0	0	0	7	0	0	0	0	7	0	0	0	7	7	0	19	7	0	0	12	6	5	0	0
23	0	0	0	7	0	0	0	0	7	0	7	0	0	0	7	0	0	0	0	7	0	0	0	7	7	0	19	7	0	0	12	6	5	0	0
24	0	0	0	7	0	0	0	0	7	0	7	0	0	0	7	0	0	0	0	7	0	0	0	7	7	0	19	7	0	0	12	6	5	0	0
25	0	0	0	7	0	0	0	0	7	0	7	0	0	0	7	0	0	0	0	7	0	0	0	7	7	0	19	7	0	0	12	6	5	0	0
26	0	0	0	17	0	0	0	0	17	0	17	0	0	0	17	0	0	0	0	17	0	0	0	17	17	0	45	17	0	0	28	15	13	0	0
27	0	0	0	2	0	0	0	0	2	0	2	6	6	0	0	0	0	0	0	0	0	0	0	0	0	0	0	2	0	0	2	4	2	0	0
28	0	0	0	0	0	0	0	0	0	0	0	0	0	0	0	0	0	0	0	0	0	0	0	0	0	0	0	0	0	0	0	0	0	0	0
29	0	0	0	0	0	0	0	0	0	0	0	0	0	0	0	0	0	0	0	0	0	0	0	0	0	0	0	0	0	0	0	0	0	0	0
30	0	0	0	0	0	0	0	0	0	0	0	0	0	0	0	0	0	0	0	0	0	0	0	0	0	0	0	0	0	0	0	0	0	0	0
31	0	0	0	14	0	0	0	0	14	0	14	36	36	0	0	0	0	0	0	0	0	0	0	0	0	0	0	14	0	0	14	24	10	0	0
32	0	0	0	14	0	0	0	0	14	0	14	36	36	0	0	0	0	0	0	0	0	0	0	0	0	0	0	14	0	0	14	24	10	0	0
33	0	0	0	14	0	0	0	0	14	0	14	36	36	0	0	0	0	0	0	0	0	0	0	0	0	0	0	14	0	0	14	24	10	0	0
34	0	0	0	14	0	0	0	0	14	0	14	36	36	0	0	0	0	0	0	0	0	0	0	0	0	0	0	14	0	0	14	24	10	0	0
35	0	0	0	31	9	9	9	0	31	0	67	90	90	0	0	0	0	0	0	0	0	0	0	0	0	0	0	34	0	0	34	60	26	3	0
36	0	0	0	20	0	0	12	0	20	0	31	54	54	0	0	0	0	0	0	0	0	0	0	0	0	0	0	20	0	0	20	36	15	0	0
37	0	0	0	6	0	0	8	0	6	0	14	14	14	0	0	0	0	0	0	0	0	0	0	0	0	0	0	6	0	0	6	10	4	0	0
38	0	0	0	9	0	0	0	0	9	0	23	23	23	0	0	0	0	0	0	0	0	0	0	0	0	0	0	9	0	0	9	15	7	0	0
39	0	0	0	3	0	0	0	0	3	0	9	9	9	0	0	0	0	0	0	0	0	0	0	0	0	0	0	3	0	0	3	6	2	0	0
40	0	0	0	12	56	56	56	0	12	0	74	88	88	0	0	0	0	0	0	0	0	0	0	0	0	0	0	34	0	0	34	59	25	22	0
41	0	0	0	6	56	56	56	0	6	0	67	71	71	0	0	0	0	0	0	0	0	0	0	0	0	0	0	27	0	0	27	47	20	22	0
42	0	0	0	19	56	56	56	0	19	0	104	107	107	0	0	0	0	0	0	0	0	0	0	0	0	0	0	41	0	0	41	71	31	22	0
43	0	0	0	24	0	0	78	0	24	0	59	62	62	0	0	0	0	0	0	0	0	0	0	0	0	0	0	24	0	0	24	42	18	0	0
44	0	0	0	29	0	0	78	0	29	0	64	62	62	0	6	20	14	0	14	0	0	0	0	0	0	0	0	29	0	0	29	51	22	0	0
45	0	0	0	26	0	0	78	0	26	0	61	62	62	0	2	8	6	0	6	0	0	0	0	0	0	0	0	26	0	0	26	45	19	0	0
46	0	0	0	44	0	0	96	0	44	0	87	116	116	0	0	0	0	0	0	0	0	0	0	0	0	0	0	44	0	0	44	77	33	0	0
47	0	0	0	30	0	0	0	0	30	0	80	80	80	0	0	0	0	0	0	0	0	0	0	0	0	0	0	30	0	0	30	53	23	0	0
48	0	0	0	0	0	0	0	0	0	0	0	0	0	0	0	0	0	0	0	0	0	0	0	0	0	0	0	0	0	0	0	0	0	0	0
49	0	0	0	0	0	0	0	0	0	0	0	0	0	0	0	0	0	0	0	0	0	0	0	0	0	0	0	0	0	0	0	0	0	0	0
50	0	0	0	0	0	0	0	0	0	0	0	0	0	0	0	0	0	0	0	0	0	0	0	0	0	0	0	0	0	0	0	0	0	0	0
51	0	0	0	0	0	0	0	0	0	0	0	0	0	0	0	0	0	0	0	0	0	0	0	0	0	0	0	0	0	0	0	0	0	0	0
52	0	0	0	0	0	0	0	0	0	0	0	0	0	0	0	0	0	0	0	0	0	0	0	0	0	0	0	0	0	0	0	0	0	0	0
53	0	140	0	125	190	190	190	0	125	0	364	301	301	0	82	98	71	0	71	55	0	0	0	55	55	0	145	197	0	0	231	296	148	72	0
54	0	140	0	115	164	164	164	0	115	0	328	275	275	0	72	98	71	0	71	45	0	0	0	45	45	0	119	177	0	0	205	270	133	62	0
55	0	118	0	111	148	148	148	0	111	0	308	251	251	0	72	98	71	0	71	45	0	0	0	45	45	0	119	168	0	0	196	254	126	56	0
56	0	118	0	111	148	148	148	0	111	0	308	251	251	0	72	98	71	0	71	45	0	0	0	45	45	0	119	168	0	0	196	254	126	56	0
57	18	116	0	151	116	116	240	0	151	0	372	323	323	0	92	98	71	0	71	45	0	0	0	45	45	0	119	195	0	0	224	302	146	44	0
58	18	116	0	108	116	116	192	0	108	0	258	209	209	0	92	98	71	0	71	45	0	0	0	45	45	0	119	152	0	0	180	226	114	44	0
59	18	116	0	102	142	142	218	0	102	0	278	220	220	0	72	98	71	0	71	45	0	0	0	45	45	0	119	156	0	0	184	234	117	54	0
60	18	116	0	96	97	97	173	0	96	0	227	175	175	0	66	76	55	0	55	45	0	0	0	45	45	0	119	133	0	0	161	193	100	37	0
61	18	116	0	100	97	97	173	0	100	0	259	319	319	0	119	0	0	0	0	15	0	0	0	15	15	0	41	137	0	0	146	226	103	37	0
62	18	116	0	71	97	97	173	0	71	0	212	268	268	0	110	0	0	0	0	6	0	0	0	6	6	0	14	108	0	0	111	183	81	37	0
63	18	118	0	72	98	98	180	0	72	0	218	274	274	0	110	0	0	0	0	6	0	0	0	6	6	0	14	110	0	0	113	187	82	38	0
64	18	118	0	86	98	98	228	0	86	0	253	308	308	0	110	0	0	0	0	6	0	0	0	6	6	0	14	123	0	0	126	210	92	38	0
65	0	122	0	67	88	88	88	0	67	0	194	249	249	0	110	0	0	0	0	6	0	0	0	6	6	0	14	100	0	0	104	171	75	34	0
66	34	122	0	174	113	113	113	0	174	0	354	364	364	0	245	84	94	0	148	23	0	0	0	23	23	0	59	217	0	0	232	361	163	43	0
67	26	108	0	133	97	97	97	0	133	0	279	278	278	0	204	84	94	0	148	8	0	0	0	8	8	0	20	170	0	0	175	291	127	37	0
68	26	82	0	127	78	78	78	0	127	0	273	288	288	0	187	64	68	0	104	8	0	0	0	8	8	0	20	157	0	0	162	268	118	30	0
69	26	82	0	110	78	78	78	0	110	0	228	243	243	0	187	64	68	0	104	8	0	0	0	8	8	0	20	140	0	0	145	238	105	30	0
70	160	160	0	228	232	232	232	0	228	0	527	487	487	0	333	64	68	0	104	91	0	0	0	91	91	62	239	316	0	0	373	474	237	88	0
71	130	160	0	204	210	210	210	0	204	0	461	439	439	0	319	64	68	0	104	77	0	0	0	77	77	12	203	284	0	0	332	430	213	80	0
72	58	256	0	212	227	227	227	0	212	0	503	484	484	0	317	64	68	0	104	75	0	0	0	75	75	12	197	299	0	0	346	458	224	87	0
73	58	256	0	195	227	227	227	0	195	0	459	439	439	0	317	64	68	0	104	75	0	0	0	75	75	12	197	282	0	0	329	428	211	87	0
74	58	256	0	167	227	227	227	0	167	0	430	364	364	0	213	64	68	0	104	75	0	0	0	75	75	12	197	253	0	0	300	378	190	87	0
75	58	256	0	167	227	227	227	0	167	0	430	364	364	0	213	64	68	0	104	75	0	0	0	75	75	12	197	253	0	0	300	378	190	87	0
76	58	160	0	167	158	158	158	0	167	0	360	294	294	0	213	64	68	0	104	75	0	0	0	75	75	12	197	227	0	0	274	331	170	60	0
77	58	160	0	180	158	158	158	0	180	0	395	339	339	0	235	64	68	0	104	72	0	0	0	72	72	0	188	241	0	0	285	358	180	60	0
78	58	160	0	146	158	158	158	0	146	0	333	249	249	0	173	64	68	0	104	72	0	0	0	72	72	0	188	206	0	0	251	298	155	60	0
79	58	160	0	126	203	203	203	0	126	0	357	294	294	0	153	62	47	8	51	72	0	0	0	72	72	0	188	203	0	0	248	293	152	77	0
80	58	160	0	117	174	174	174	0	117	0	319	265	265	0	144	26	22	12	28	72	0	0	0	72	72	0	188	183	0	0	228	258	137	66	0
81	88	160	0	116	196	196	196	0	116	0	340	285	285	0	144	26	22	12	28	72	0	0	0	72	72	0	188	191	0	0	236	271	143	74	0
82	26	160	0	116	151	151	151	0	116	0	294	240	240	0	144	26	23	0	23	70	0	16	0	70	70	0	184	173	0	0	217	242	130	57	0
83	88	232	0	177	248	248	248	0	177	0	452	337	337	0	204	26	61	142	125	93	0	9	3	93	93	0	247	271	0	0	326	390	203	94	0
84	88	150	0	145	188	188	188	0	145	0	333	233	233	0	189	26	46	100	91	93	0	0	0	93	93	0	243	216	0	0	274	297	162	72	0
85	88	150	0	213	188	188	188	0	213	0	401	233	233	0	258	254	217	120	271	93	0	0	0	93	93	0	243	285	0	0	343	417	214	72	0
86	26	142	0	213	138	138	138	0	213	0	351	182	182	0	258	254	217	120	271	93	0	0	0	93	93	0	243	265	0	0	323	383	199	52	0
87	26	142	0	215	138	138	138	0	215	0	353	182	182	0	260	254	219	120	273	93	0	6	2	93	93	0	246	268	0	0	323	385	201	52	0
88	26	142	0	174	138	138	138	0	174	0	312	182	182	0	219	102	110	120	164	93	0	9	3	93	93	0	247	227	0	0	281	312	170	52	0
89	26	142	0	150	138	138	138	0	150	0	287	182	182	0	194	26	48	106	96	96	0	0	0	96	96	0	252	202	0	0	262	269	151	52	0
90	26	142	0	175	167	167	167	0	175	0	341	211	211	0	220	62	86	148	152	100	0	0	0	100	100	0	262	238	0	0	301	330	179	63	0
91	0	80	0	114	58	58	58	0	114	0	172	103	103	0	159	0	24	86	62	73	0	0	0	73	73	0	193	136	0	0	182	174	102	22	0
92	0	80	0	178	58	58	58	0	178	0	236	103	103	0	223	0	89	86	167	72	0	107	41	72	72	8	231	200	0	0	205	246	150	22	0
93	0	80	0	172	58	58	58	0	172	0	230	103	103	0	217	0	85	0	124	70	0	186	34	70	70	0	218	194	0	0	204	245	146	22	0
94	0	0	0	154	0	0	0	0	154	0	154	0	0	0	154	0	84	0	122	70	0	186	34	70	70	0	218	154	0	0	164	174	115	0	0
95	0	0	0	154	0	0	0	0	154	0	154	0	0	0	154	0	84	0	122	70	0	186	34	70	70	0	218	154	0	0	164	174	115	0	0
96	0	0	0	169	0	0	0	0	169	0	169	0	0	0	169	0	99	0	161	70	0	186	34	70	70	0	218	169	0	0	179	200	127	0	0
97	0	0	0	182	0	0	0	0	182	0	182	0	0	0	182	0	86	0	168	96	0	118	8	96	96	0	260	182	0	0	234	226	136	0	0
98	0	0	0	201	0	0	0	0	201	0	201	0	0	0	201	0	105	0	182	96	0	154	58	96	96	0	310	201	0	0	203	210	151	0	0
99	0	0	0	84	0	0	0	0	84	0	84	0	0	0	84	0	54	0	102	30	0	64	24	30	30	0	102	84	0	0	78	96	63	0	0
100	0	0	0	0	0	0	0	0	0	0	0	0	0	0	0	0	0	0	0	0	0	0	0	0	0	0	0	0	0	0	0	0	0	0	0
101	0	0	0	0	0	0	0	0	0	0	0	0	0	0	0	0	0	0	0	0	0	0	0	0	0	0	0	0	0	0	0	0	0	0	0
102	0	0	0	0	0	0	0	0	0	0	0	0	0	0	0	0	0	0	0	0	0	0	0	0	0	0	0	0	0	0	0	0	0	0	0
103	0	0	0	0	0	0	0	0	0	0	0	0	0	0	0	0	0	0	0	0	0	0	0	0	0	0	0	0	0	0	0	0	0	0	0
104	0	0	0	0	0	0	0	0	0	0	0	0	0	0	0	0	0	0	0	0	0	0	0	0	0	0	0	0	0	0	0	0	0	0	0
105	0	184	0	125	133	133	133	0	125	0	258	133	133	0	125	0	96	56	185	29	0	109	41	29	29	0	118	176	0	0	153	241	132	51	0
106	0	184	0	100	133	133	133	0	100	0	234	133	133	0	100	0	71	56	172	29	0	23	9	29	29	0	86	151	0	0	161	230	113	51	0
107	0	184	0	107	133	133	133	0	107	0	240	133	133	0	107	0	78

Receptor	1	2	3	4	5	6	7	8	9	10	11	12	13	14	15	16	17	18	19	20	21	22	23	24	25	26	27	28	29	30	31	32	33	34	35
115	0	0	0	239	0	0	0	0	239	0	239	0	0	0	239	0	138	64	335	100	0	46	18	100	100	6	281	239	0	0	284	313	179	0	0
116	0	0	0	250	0	0	0	0	250	0	250	0	0	0	250	0	150	64	365	100	0	46	18	100	100	6	281	250	0	0	296	333	188	0	0
117	0	0	0	232	0	0	0	0	232	0	232	0	0	0	232	0	115	64	303	116	0	0	0	116	116	6	306	232	0	0	304	304	174	0	0
118	0	0	0	175	0	0	0	0	175	0	175	0	0	0	175	0	104	64	274	71	0	0	0	71	71	6	187	175	0	0	220	245	132	0	0
119	0	0	0	163	0	0	0	0	163	0	163	0	0	0	163	0	92	56	242	71	0	0	0	71	71	6	187	163	0	0	208	224	122	0	0
120	0	0	0	174	0	0	0	0	174	0	174	0	0	0	174	0	103	56	269	71	0	0	0	71	71	6	187	174	0	0	218	242	130	0	0
121	0	0	0	156	0	0	0	0	156	0	156	0	0	0	156	0	86	56	224	71	0	0	0	71	71	4	185	156	0	0	200	211	117	0	0
122	0	0	0	193	0	0	0	0	193	0	193	0	0	0	193	0	102	118	266	92	0	0	0	92	92	80	240	193	0	0	250	258	145	0	0
123	0	0	0	183	0	0	0	0	183	0	183	0	0	0	183	0	91	80	239	92	0	0	0	92	92	80	240	183	0	0	240	239	137	0	0
124	0	0	0	268	0	0	0	0	268	0	268	0	0	0	268	0	76	24	169	193	0	66	0	193	193	80	505	268	0	0	388	301	201	0	0
125	0	0	0	244	0	0	0	0	244	0	244	0	0	0	244	0	82	24	186	162	0	66	0	162	162	206	424	244	0	0	345	285	183	0	0
126	0	0	0	148	0	0	0	0	148	0	148	0	0	0	148	0	65	24	141	83	0	66	0	83	83	90	219	148	0	0	200	187	111	0	0
127	0	0	0	146	0	0	0	0	146	0	146	0	0	0	146	0	65	24	141	81	0	66	0	81	81	92	211	146	0	0	196	184	109	0	0
128	0	0	0	146	0	0	0	0	146	0	146	0	0	0	146	0	65	24	141	81	0	66	0	81	81	92	211	146	0	0	196	184	109	0	0
129	0	0	0	156	0	0	0	0	156	0	156	0	0	0	156	0	76	62	169	81	0	66	0	81	81	92	211	156	0	0	206	203	117	0	0
130	0	0	0	118	0	0	0	0	118	0	118	0	0	0	118	0	58	0	124	60	0	66	0	60	60	16	156	118	0	0	155	154	89	0	0
131	0	0	0	118	0	0	0	0	118	0	118	0	0	0	118	0	58	0	124	60	0	66	0	60	60	16	156	118	0	0	155	154	89	0	0
132	0	0	0	117	0	0	0	0	117	0	117	0	0	0	117	0	58	0	124	58	0	48	18	58	58	16	172	117	0	0	135	135	88	0	0
133	0	0	0	117	0	0	0	0	117	0	117	0	0	0	117	0	58	0	124	58	0	48	18	58	58	16	172	117	0	0	135	135	88	0	0
134	0	0	0	93	0	0	0	0	93	0	93	0	0	0	93	0	58	0	124	35	0	48	18	35	35	10	109	93	0	0	97	115	70	0	0
135	0	0	0	93	0	0	0	0	93	0	93	0	0	0	93	0	58	0	124	35	0	48	18	35	35	10	109	93	0	0	97	115	70	0	0
136	0	0	0	93	0	0	0	0	93	0	93	0	0	0	93	0	58	0	124	35	0	48	18	35	35	10	109	93	0	0	97	115	70	0	0
137	0	0	0	93	0	0	0	0	93	0	93	0	0	0	93	0	58	0	124	35	0	48	18	35	35	10	109	93	0	0	97	115	70	0	0
138	0	0	0	52	0	0	0	0	52	0	52	0	0	0	52	0	40	0	106	12	0	0	0	12	12	10	32	52	0	0	60	81	39	0	0
139	0	0	0	45	0	0	0	0	45	0	45	0	0	0	45	0	40	0	106	5	0	0	0	5	5	4	13	45	0	0	48	75	34	0	0
140	0	0	0	5	0	0	0	0	5	0	5	0	0	0	5	0	0	0	0	5	0	0	0	5	5	4	13	5	0	0	8	4	4	0	0
141	0	0	0	5	0	0	0	0	5	0	5	0	0	0	5	0	0	0	0	5	0	0	0	5	5	4	13	5	0	0	8	4	4	0	0
142	0	0	0	5	0	0	0	0	5	0	5	0	0	0	5	0	0	0	0	5	0	0	0	5	5	4	13	5	0	0	8	4	4	0	0
143	0	0	0	5	0	0	0	0	5	0	5	0	0	0	5	0	0	0	0	5	0	0	0	5	5	4	13	5	0	0	8	4	4	0	0
144	0	0	0	5	0	0	0	0	5	0	5	0	0	0	5	0	0	0	0	5	0	0	0	5	5	4	13	5	0	0	8	4	4	0	0
145	0	0	0	5	0	0	0	0	5	0	5	0	0	0	5	0	0	0	0	5	0	0	0	5	5	4	13	5	0	0	8	4	4	0	0
146	0	0	0	5	0	0	0	0	5	0	5	0	0	0	5	0	0	0	0	5	0	0	0	5	5	4	13	5	0	0	8	4	4	0	0
147	0	0	0	5	0	0	0	0	5	0	5	0	0	0	5	0	0	0	0	5	0	0	0	5	5	4	13	5	0	0	8	4	4	0	0
148	38	40	0	42	56	56	56	0	42	0	98	56	56	0	42	0	29	24	68	13	0	12	4	13	13	4	39	63	0	0	67	95	48	22	0
149	18	24	0	44	30	30	30	0	44	0	74	30	30	0	44	0	30	16	72	13	0	12	4	13	13	4	39	55	0	0	59	81	41	12	0
150	18	0	0	54	13	13	13	0	54	0	67	13	13	0	54	0	26	16	68	28	0	0	0	28	28	4	74	59	0	0	77	79	44	5	0
151	18	0	0	61	13	13	13	0	61	0	74	13	13	0	61	0	35	24	91	26	0	0	0	26	26	4	70	66	0	0	83	93	50	5	0
152	0	0	0	51	0	0	0	0	51	0	51	0	0	0	51	0	18	0	39	34	0	16	0	34	34	28	88	51	0	0	72	60	38	0	0
153	0	0	0	0	0	0	0	0	0	0	0	0	0	0	0	0	0	0	0	0	0	0	0	0	0	0	0	0	0	0	0	0	0	0	0
154	0	0	0	0	0	0	0	0	0	0	0	0	0	0	0	0	0	0	0	0	0	0	0	0	0	0	0	0	0	0	0	0	0	0	0
155	0	0	0	0	0	0	0	0	0	0	0	0	0	0	0	0	0	0	0	0	0	0	0	0	0	0	0	0	0	0	0	0	0	0	0
156	0	0	0	0	0	0	0	0	0	0	0	0	0	0	0	0	0	0	0	0	0	0	0	0	0	0	0	0	0	0	0	0	0	0	0
157	144	76	0	98	175	175	175	0	98	0	273	187	187	0	110	0	80	160	192	14	0	33	7	14	14	4	43	165	0	0	167	270	124	67	0
158	0	274	0	202	198	198	224	0	202	0	412	229	229	0	206	0	171	198	353	19	0	155	59	19	19	4	110	278	0	0	231	410	208	76	0
159	0	258	0	165	187	187	205	0	165	0	360	211	211	0	172	0	151	198	311	5	0	136	52	5	5	4	65	236	0	0	187	357	177	71	0
160	0	68	0	103	49	49	49	0	103	0	160	74	74	0	110	0	50	172	130	44	0	0	0	44	44	4	116	122	0	0	150	175	91	19	0
161	0	36	0	212	194	194	194	0	212	0	415	455	455	0	357	0	69	172	181	44	0	0	0	44	44	4	116	286	0	0	314	462	215	74	0
162	0	36	0	376	26	26	260	0	376	0	515	456	456	0	456	0	132	0	238	81	0	242	0	81	81	4	211	386	0	0	437	605	290	10	0
163	0	0	0	305	0	0	96	0	305	0	348	317	317	0	428	0	132	0	238	52	0	242	0	52	52	174	136	305	0	0	337	488	228	0	0
164	0	0	0	234	0	0	0	0	234	0	332	335	335	0	350	0	102	0	207	5	0	96	36	5	5	4	49	234	0	0	201	369	175	0	0
165	0	0	0	169	0	0	0	0	169	0	267	335	335	0	285	0	36	0	36	5	0	96	36	5	5	4	49	169	0	0	136	255	127	0	0
166	0	0	0	132	0	0	0	0	132	0	230	335	335	0	249	0	0	0	0	5	0	0	0	5	5	4	13	132	0	0	136	227	99	0	0
167	0	0	0	5	0	0	0	0	5	0	5	0	0	0	5	0	0	0	0	5	0	0	0	5	5	4	13	5	0	0	8	4	4	0	0
168	0	0	0	5	0	0	0	0	5	0	5	0	0	0	5	0	0	0	0	5	0	0	0	5	5	4	13	5	0	0	8	4	4	0	0
169	0	0	0	5	0	0	0	0	5	0	5	0	0	0	5	0	0	0	0	5	0	0	0	5	5	4	13	5	0	0	8	4	4	0	0
170	0	0	0	0	0	0	0	0	0	0	0	0	0	0	0	0	0	0	0	0	0	0	0	0	0	0	0	0	0	0	0	0	0	0	0
171	0	0	0	0	0	0	0	0	0	0	0	0	0	0	0	0	0	0	0	0	0	0	0	0	0	0	0	0	0	0	0	0	0	0	0
172	0	0	0	0	0	0	0	0	0	0	0	0	0	0	0	0	0	0	0	0	0	0	0	0	0	0	0	0	0	0	0	0	0	0	0
173	0	0	0	0	0	0	0	0	0	0	0	0	0	0	0	0	0	0	0	0	0	0	0	0	0	0	0	0	0	0	0	0	0	0	0
174	0	0	0	0	0	0	0	0	0	0	0	0	0	0	0	0	0	0	0	0	0	0	0	0	0	0	0	0	0	0	0	0	0	0	0
175	0	0	0	0	0	0	0	0	0	0	0	0	0	0	0	0	0	0	0	0	0	0	0	0	0	0	0	0	0	0	0	0	0	0	0
176	0	0	0	0	0	0	0	0	0	0	0	0	0	0	0	0	0	0	0	0	0	0	0	0	0	0	0	0	0	0	0	0	0	0	0
177	0	0	0	0	0	0	0	0	0	0	0	0	0	0	0	0	0	0	0	0	0	0	0	0	0	0	0	0	0	0	0	0	0	0	0
178	0	0	0	0	0	0	0	0	0	0	0	0	0	0	0	0	0	0	0	0	0	0	0	0	0	0	0	0	0	0	0	0	0	0	0
179	0	0	0	0	0	0	0	0	0	0	0	0	0	0	0	0	0	0	0	0	0	0	0	0	0	0	0	0	0	0	0	0	0	0	0
180	0	0	0	0	0	0	0	0	0	0	0	0	0	0	0	0	0	0	0	0	0	0	0	0	0	0	0	0	0	0	0	0	0	0	0
181	0	0	0	0	0	0	0	0	0	0	0	0	0	0	0	0	0	0	0	0	0	0	0	0	0	0	0	0	0	0	0	0	0	0	0
182	0	0	0	0	0	0	0	0	0	0	0	0	0	0	0	0	0	0	0	0	0	0	0	0	0	0	0	0	0	0	0	0	0	0	0
183	0	0	0	0	0	0	0	0	0	0	0	0	0	0	0	0	0	0	0	0	0	0	0	0	0	0	0	0	0	0	0	0	0	0	0
184	0	0	0	0	0	0	0	0	0	0	0	0	0	0	0	0	0	0	0	0	0	0	0	0	0	0	0	0	0	0	0	0	0	0	0
185	0	0	0	0	0	0	0	0	0	0	0	0	0	0	0	0	0	0	0	0	0	0	0	0	0	0	0	0	0	0	0	0	0	0	0
186	0	0	0	0	0	0	0	0	0	0	0	0	0	0	0	0	0	0	0	0	0	0	0	0	0	0	0	0	0	0	0	0	0	0	0
187	0	0	0	0	0	0	0	0	0	0	0	0	0	0	0	0	0	0	0	0	0	0	0	0	0	0	0	0	0	0	0	0	0	0	0
188	0	0	0	0	0	0	0	0	0	0	0	0	0	0	0	0	0	0	0	0	0	0	0	0	0	0	0	0	0	0	0	0	0	0	0
189	0	0	0	0	0	0	0	0	0	0	0	0	0	0	0	0	0	0	0	0	0	0	0	0	0	0	0	0	0	0	0	0	0	0	0
190	0	0	0	0	0	0	0	0	0	0	0	0	0	0	0	0	0	0	0	0	0	0	0	0	0	0	0	0	0	0	0	0	0	0	0
191	0	0	0	0	0	0	0	0	0	0	0	0	0	0	0	0	0	0	0	0	0	0	0	0	0	0	0	0	0	0	0	0	0	0	0
192	0	0	0	0	0	0	0	0	0	0	0	0	0	0	0	0	0	0	0	0	0	0	0	0	0	0	0	0	0	0	0	0	0	0	0
193	0	0	0	0	0	0	0	0	0	0	0	0	0	0	0	0	0	0	0	0	0	0	0	0	0	0	0	0	0	0	0	0	0	0	0
194	0	0	0	0	0	0	0	0	0	0	0	0	0	0	0	0	0	0	0	0	0	0	0	0	0	0	0	0	0	0	0	0	0	0	0
195	0	0	0	0	0	0	0	0	0	0	0	0	0	0	0	0	0	0	0	0	0	0	0	0	0	0	0	0	0	0	0	0	0	0	0
196	0	0	0	0	0	0	0	0	0	0	0	0	0	0	0	0	0	0	0	0	0	0	0	0	0	0	0	0	0	0	0	0	0	0	0
197	0	0	0	0	0	0	0	0	0	0	0	0	0	0	0	0	0	0	0	0	0	0	0	0	0	0	0	0	0	0	0	0	0	0	0
198	0	0	0	0	0	0	0	0	0	0	0	0	0	0	0	0	0	0	0	0	0	0	0	0	0	0	0	0	0	0	0	0	0	0	0
199	0	0	0	0	0	0	0	0	0	0	0	0	0	0	0	0	0	0	0	0	0	0	0	0	0	0	0	0	0	0	0	0	0	0	0
200	0	0	0	0	0	0	0	0	0	0	0	0	0	0	0	0	0	0	0	0	0	0	0	0	0	0	0	0	0	0	0	0	0	0	0
201	0	0	0	0	0	0	0	0	0	0	0	0	0	0	0	0	0	0	0	0	0	0	0	0	0	0	0	0	0	0	0	0	0	0	0
202	0	0	0	0	0	0	0	0	0	0	0	0	0	0	0	0	0	0	0	0	0	0	0	0	0	0	0	0	0	0	0	0	0	0	0
203	0	0	0	0	0	0	0	0	0	0	0	0	0	0	0	0	0	0	0	0	0	0	0	0	0	0	0	0	0	0	0	0	0	0	0
204	0	0	0	0	0	0	0	0	0	0	0	0	0	0	0	0	0	0	0	0	0	0	0	0	0	0	0	0	0	0	0	0	0	0	0

AAWT (divided by 5 working days)

Receptor	1	2	3	4	5	6	7	8	9	10	11	12	13	14	15	16	17	18	19	20	21	22	23	24	25	26	27	28	29	30	31	32	33	34	35
Year 1 (Weeks 0-47)	0	6	0	3	5	5	6	0	3	0	9	8	8	0	1	0	1	0	3	0	0	0	0	0	0	0	1	4	0	0	5	8	3	2	0
Year 2 (Weeks 53-99)	7	25	0	29	26	26	29	0	29	0	61	48	48	0	35	12	14	5	20	12	0	5	1	12	12	1	33	39	0	0	45	57	29	10	0
Year 3 (Weeks 105-15	0	6	0	24	4	4	4	0	24	0	29	4	4	0	24	0	13	6	32	11	0	6	2	11	11	5	30	26	0	0	31	35	20	2	0
Year 4 (Weeks 157-20	1	3	0	8	3	3	5	0	8	0	14	12	12	0	11	0	4	4	8	1	0	4	1	1	1	1	4	10	0	0	10	15	7	1	0

AADT (divided by 7 days)

Receptor	1	2	3	4	5	6	7	8	9	10	11	12	13	14	15	16	17	18	19	20	21	22	23	24	25	26	27	28	29	30	31	32	33	34	35
Year 1 (Weeks 0-47)	0	4	0	2	3	3	4	0	2	0	6	6	6	0	1	0	1	0	2	0	0	0	0	0	0	0	1	3	0	0	3	5	2	1	0
Year 2 (Weeks 53-99)	5	18	0	21	18	18	20	0	21	0	44	34	34	0	25	8	10	4	15	9	0	4	1	9	9	0	23	28	0	0	32	40	21	7	0
Year 3 (Weeks 105-15	0	4	0	17	3	3	3	0	17	0	21	3	3	0	17	0	10	4	23	8	0	4	1	8	8	4	22	19	0	0	22	25	14	1	0
Year 4 (Weeks 157-20	0	2	0	6	2	2	4	0	6	0	10	9	9	0	8	0	3	3	6	1	0	3	1	1	1	1	3	7	0	0	7	11	5	1	0

HGV Peak Week																					
Receptor	A (76)	B (76)	C (64)	D (68)	E (41)	F (27)	G (23)	H (21)	I (23)	J (26)	K (30)	L (69)	M (58)	N (51)	O (16)	P (15)	Q (7)	R (2)	S (3)	T (3)	U (42)
Week																					
0	0	0	0	0	0	0	0	0	0	0	0	0	0	0	0	0	0	0	0	0	0
1	0	0	0	0	0	0	0	0	0	0	0	0	0	0	0	0	0	0	0	0	0
2	0	0	0	0	0	0	0	0	0	0	0	0	0	0	0	0	0	0	0	0	0
3	0	0	0	0	0	0	0	0	0	0	0	0	0	0	0	0	0	0	0	0	0
4	0	0	0	0	0	0	0	0	0	0	0	0	0	0	0	0	0	0	0	0	0
5	0	0	0	0	0	0	0	0	0	0	0	0	0	0	0	0	0	0	0	0	0
6	0	0	0	0	0	0	0	0	0	0	0	0	0	0	0	0	0	0	0	0	0
7	0	0	0	0	0	0	0	0	0	0	0	0	0	0	0	0	0	0	0	0	0
8	0	0	0	0	0	0	0	0	0	0	0	0	0	0	0	0	0	0	0	0	0
9	0	0	0	0	0	0	0	0	0	0	0	0	0	0	0	39	143	198	0	0	0
10	0	0	0	0	0	0	0	0	0	0	0	0	0	0	0	29	117	162	0	0	0
11	0	0	0	0	0	0	0	0	0	0	0	0	0	0	0	29	117	162	0	0	0
12	0	0	0	0	0	0	0	0	0	0	0	0	0	0	0	29	117	162	0	0	0
13	0	0	0	0	0	0	0	0	0	0	0	0	0	0	0	29	117	162	0	0	0
14	0	0	0	0	0	0	0	0	0	0	0	0	0	0	0	29	117	162	0	0	0
15	0	0	0	0	0	0	0	0	0	0	0	0	0	0	0	29	117	162	0	0	0
16	0	0	0	0	0	0	0	0	0	0	0	0	0	0	0	29	117	162	0	0	0
17	0	0	0	0	0	0	0	0	0	0	0	0	0	0	0	0	0	0	0	0	0
18	0	0	0	0	0	0	0	0	0	0	0	0	0	0	0	0	0	0	0	0	0
19	0	0	17	0	17	45	0	0	0	0	0	0	0	0	0	17	0	0	0	0	62
20	0	0	7	0	7	19	0	0	0	0	0	0	0	0	0	7	0	0	0	0	26
21	0	0	7	0	7	19	0	0	0	0	0	0	0	0	0	7	0	0	0	0	26
22	0	0	7	0	7	19	0	0	0	0	0	0	0	0	0	7	0	0	0	0	26
23	0	0	7	0	7	19	0	0	0	0	0	0	0	0	0	7	0	0	0	0	26
24	0	0	7	0	7	19	0	0	0	0	0	0	0	0	0	7	0	0	0	0	26
25	0	0	7	0	7	19	0	0	0	0	0	0	0	0	0	7	0	0	0	0	26
26	0	0	17	0	17	45	0	0	0	0	0	0	0	0	0	17	0	0	0	0	62
27	0	0	0	0	0	0	0	0	0	0	0	0	0	0	0	0	0	0	0	0	0
28	0	0	0	0	0	0	0	0	0	0	0	0	0	0	0	0	0	0	0	0	0
29	0	0	0	0	0	0	0	0	0	0	0	0	0	0	0	0	0	0	0	0	0
30	0	0	0	0	0	0	0	0	0	0	0	0	0	0	0	0	0	0	0	0	0
31	0	0	0	0	0	0	0	0	0	0	0	0	0	0	0	0	0	0	0	0	0
32	0	0	0	0	0	0	0	0	0	0	0	0	0	0	0	0	0	0	0	0	0
33	0	0	0	0	0	0	0	0	0	0	0	0	0	0	0	0	0	0	0	0	0
34	0	0	0	0	0	0	0	0	0	0	0	0	0	0	0	0	0	0	0	0	0
35	0	0	0	0	0	0	0	0	0	0	0	0	0	0	0	0	9	0	0	0	0
36	0	0	0	0	0	0	0	0	0	0	0	0	0	0	0	0	12	0	0	0	0
37	0	0	0	0	0	0	0	0	0	0	0	0	0	0	0	0	8	0	0	0	0
38	0	0	0	0	0	0	0	0	0	0	0	0	0	0	0	0	0	0	0	0	0
39	0	0	0	0	0	0	0	0	0	0	0	0	0	0	0	0	0	0	0	0	0
40	0	0	0	0	0	0	0	0	0	0	0	0	0	0	0	0	56	0	0	0	0
41	0	0	0	0	0	0	0	0	0	0	0	0	0	0	0	0	56	0	0	0	0
42	0	0	0	0	0	0	0	0	0	0	0	0	0	0	0	0	56	0	0	0	0
43	0	0	0	0	0	0	0	0	0	0	0	0	0	0	0	0	78	0	0	0	0
44	0	0	0	0	0	0	0	0	0	0	0	0	0	0	20	6	78	0	0	0	0
45	0	0	0	0	0	0	0	0	0	0	0	0	0	0	8	2	78	0	0	0	0
46	0	0	0	0	0	0	0	0	0	0	0	0	0	0	0	0	96	0	0	0	0
47	0	0	0	0	0	0	0	0	0	0	0	0	0	0	0	0	0	0	0	0	0
48	0	0	0	0	0	0	0	0	0	0	0	0	0	0	0	0	0	0	0	0	0
49	0	0	0	0	0	0	0	0	0	0	0	0	0	0	0	0	0	0	0	0	0
50	0	0	0	0	0	0	0	0	0	0	0	0	0	0	0	0	0	0	0	0	0
51	0	0	0	0	0	0	0	0	0	0	0	0	0	0	0	0	0	0	0	0	0
52	0	0	0	0	0	0	0	0	0	0	0	0	0	0	0	0	0	0	0	0	0
53	0	0	55	0	55	145	0	0	0	0	0	0	0	0	98	82	190	140	0	0	0
54	0	0	45	0	45	119	0	0	0	0	0	0	0	0	98	72	164	140	0	0	0
55	0	0	45	0	45	119	0	0	0	0	0	0	0	0	98	72	148	118	0	0	0
56	0	0	45	0	45	119	0	0	0	0	0	0	0	0	98	72	148	118	0	0	0
57	0	0	45	0	45	119	0	0	0	0	0	0	0	0	98	92	240	116	0	0	0
58	0	0	45	0	45	119	0	0	0	0	0	0	0	0	98	92	192	116	0	0	0
59	0	0	45	0	45	119	0	0	0	0	0	0	0	0	98	72	218	116	0	0	0
60	0	0	45	0	45	119	0	0	0	0	0	0	0	0	76	66	173	116	0	0	0
61	0	0	15	0	15	41	0	0	0	0	0	0	0	0	0	119	173	116	0	0	0
62	0	0	6	0	6	14	0	0	0	0	0	0	0	0	0	110	173	116	0	0	0
63	0	0	6	0	6	14	0	0	0	0	0	0	0	0	0	110	180	118	0	0	0
64	0	0	6	0	6	14	0	0	0	0	0	0	0	0	0	110	228	118	0	0	0
65	0	0	6	0	6	14	0	0	0	0	0	0	0	0	0	110	88	122	0	0	0
66	0	0	23	0	23	59	0	0	0	0	0	0	0	0	84	245	113	122	0	0	0
67	0	0	8	0	8	20	0	0	0	0	0	0	0	0	84	204	97	108	0	0	0
68	0	0	8	0	8	20	0	0	0	0	0	0	0	0	64	187	78	82	0	0	0
69	0	0	8	0	8	20	0	0	0	0	0	0	0	0	64	187	78	82	0	0	0
70	0	0	91	0	91	239	0	0	0	62	0	0	0	0	64	333	232	160	0	0	0
71	0	0	77	0	77	203	0	0	0	12	0	0	0	0	64	319	210	160	0	0	0
72	0	0	75	0	75	197	0	0	0	12	0	0	0	0	64	317	227	256	0	0	0
73	0	0	75	0	75	197	0	0	0	12	0	0	0	0	64	317	227	256	0	0	0
74	0	0	75	0	75	197	0	0	0	12	0	0	0	0	64	213	227	256	0	0	0
75	0	0	75	0	75	197	0	0	0	12	0	0	0	0	64	213	227	256	0	0	0
76	0	0	75	0	75	197	0	0	0	12	0	0	0	0	64	213	158	160	0	0	0
77	0	0	72	0	72	188	0	0	0	0	0	0	0	0	64	235	158	160	0	0	0
78	0	0	72	0	72	188	0	0	0	0	0	0	0	0	64	173	158	160	0	0	0
79	0	0	72	0	72	188	0	0	0	0	0	0	0	0	62	153	203	160	0	0	0
80	0	0	72	0	72	188	0	0	0	0	0	6	0	0	26	144	174	160	0	0	0
81	0	0	72	0	72	188	0	0	0	0	0	6	0	0	26	144	196	160	0	0	0
82	0	0	70	0	70	184	0	0	0	0	0	0	16	0	26	144	151	160	0	0	0
83	0	0	93	0	96	247	3	0	3	0	0	31	9	0	26	204	248	232	0	0	0
84	0	0	93	0	93	243	0	0	0	0	0	10	0	0	26	189	188	150	0	0	0
85	0	0	93	0	93	243	0	0	0	0	0	60	0	0	254	258	188	150	0	0	0
86	0	0	93	0	93	243	0	0	0	0	0	60	0	0	254	258	138	142	0	0	0
87	0	0	93	0	95	246	2	0	2	0	0	60	6	0	254	260	138	142	0	0	0
88	0	0	93	0	96	247	3	0	3	0	0	60	9	0	102	219	138	142	0	0	0
89	0	0	96	0	96	252	0	0	0	0	0	53	0	0	26	194	138	142	0	0	12
90	0	0	100	0	100	262	0	0	0	0	0	74	0	0	62	220	167	142	0	0	0
91	0	0	73	0	73	193	0	0	0	0	0	43	0	0	0	159	58	80	0	0	0
92	0	0	72	0	113	231	41	0	41	8	0	43	107	0	0	223	58	80	0	0	0
93	0	0	70	0	104	218	34	0	34	0	0	0	186	0	0	217	58	80	0	0	0
94	0	0	70	0	104	218	34	0	34	0	0	0	186	0	0	154	0	0	0	0	0
95	0	0	70	0	104	218	34	0	34	0	0	0	186	0	0	154	0	0	0	0	0
96	0	0	70	0	104	218	34	0	34	0	0	0	186	0	0	169	0	0	0	0	0
97	0	0	96	0	104	260	8	0	8	0	0	0	118	0	0	182	0	0	0	0	94
98	0	0	96	0	154	310	58	0	58	0	0	0	154	0	0	201	0	0	0	0	94
99	0	0	30	0	54	102	24	0	24	0	0	0	64	0	0	84	0	0	0	0	94
100	0	0	0	0	0	0	0	0	0	0	0	0	0	0	0	0	0	0	0	0	0
101	0	0	0	0	0	0	0	0	0	0	0	0	0	0	0	0	0	0	0	0	0
102	0	0	0	0	0	0	0	0	0	0	0	0	0	0	0	0	0	0	0	0	0
103	0	0	0	0	0	0	0	0	0	0	0	0	0	0	0	0	0	0	0	0	0
104	0	0	0	0	0	0	0	0	0	0	0	0	0	0	0	0	0	0	0	0	0
105	0	0	29	0	71	118	41	0	41	0	0	0	109	0	0	125	133	184	0	0	0
106	0	0	29	0	38	86	9	0	9	0	0	0	23	0	0	100	133	184	0	0	0
107	0	0	29	0	38	86	9	0	9	0	0	0	23	0	0	107	133	184	0	0	0
108	0	0	28	0	36	81	9	0	9	86	0	0	23	0	0	105	133	184	0	0	0
109	0	0	50	0	76	157	26	0	26	86	0	0	70	0	0	162	133	184	0	0	0
110	0	0	77	0	103	228	26	0	26	0	0	32	70	0	0	211	133	184	0	0	0
111	0	0	77	0	111	236	35	0	35	0	0	32	91	0	0	231	133	184	0	0	0
112	0	0	77	0	94	219	18	0	18	0	0	32	46	0	0	197	0	0	0	0	0
113	0	0	110	0	128	307	18	0	18	42	0	32	46	0	0	269	0	0	0	0	0
114	0	0	100	0	118	281	18	0	18	6	0	32	46	0	0	239	0	0	0	0	0

Receptor	A (76)	B (76)	C (64)	D (68)	E (41)	F (27)	G (23)	H (21)	I (23)	J (26)	K (30)	L (69)	M (58)	N (51)	O (16)	P (15)	Q (7)	R (2)	S (3)	T (3)	U (42)
115	0	0	100	0	118	281	18	0	18	6	0	32	46	0	0	239	0	0	0	0	0
116	0	0	100	0	118	281	18	0	18	6	0	32	46	0	0	250	0	0	0	0	0
117	0	0	116	0	116	306	0	0	0	6	0	32	0	0	0	232	0	0	0	0	62
118	0	0	71	0	71	187	0	0	0	6	0	32	0	0	0	175	0	0	0	0	62
119	0	0	71	0	71	187	0	0	0	6	0	28	0	0	0	163	0	0	0	0	62
120	0	0	71	0	71	187	0	0	0	6	0	28	0	0	0	174	0	0	0	0	62
121	0	0	71	0	71	185	0	0	0	4	0	28	0	0	0	156	0	0	0	0	62
122	0	0	92	0	92	240	0	0	0	80	0	28	0	0	0	193	0	0	0	0	62
123	0	0	92	0	92	240	0	0	0	80	0	28	0	0	0	183	0	0	0	0	62
124	0	0	193	0	193	505	0	0	0	80	0	0	66	0	0	268	0	0	0	0	0
125	0	0	162	0	162	424	0	0	0	206	0	0	66	0	0	244	0	0	0	0	0
126	0	0	83	0	83	219	0	0	0	90	0	0	66	0	0	148	0	0	0	0	0
127	0	0	81	0	81	211	0	0	0	92	0	0	66	0	0	146	0	0	0	0	0
128	0	0	81	0	81	211	0	0	0	92	0	0	66	0	0	146	0	0	0	0	0
129	0	0	81	0	81	211	0	0	0	92	0	0	66	0	0	156	0	0	0	0	0
130	0	0	60	0	60	156	0	0	0	16	0	0	66	0	0	118	0	0	0	0	0
131	0	0	60	0	60	156	0	0	0	16	0	0	66	0	0	118	0	0	0	0	0
132	0	0	58	0	77	172	18	0	18	16	0	0	48	0	0	117	0	0	0	0	0
133	0	0	58	0	77	172	18	0	18	16	0	0	48	0	0	117	0	0	0	0	0
134	0	0	35	0	53	109	18	0	18	10	0	0	48	0	0	93	0	0	0	0	0
135	0	0	35	0	53	109	18	0	18	10	0	0	48	0	0	93	0	0	0	0	0
136	0	0	35	0	53	109	18	0	18	10	0	0	48	0	0	93	0	0	0	0	0
137	0	0	35	0	53	109	18	0	18	10	0	0	48	0	0	93	0	0	0	0	0
138	0	0	12	0	12	32	0	0	0	10	0	0	0	0	0	52	0	0	0	0	0
139	0	0	5	0	5	13	0	0	0	4	0	0	0	0	0	45	0	0	0	0	0
140	0	0	5	0	5	13	0	0	0	4	0	0	0	0	0	5	0	0	0	0	0
141	0	0	5	0	5	13	0	0	0	4	0	0	0	0	0	5	0	0	0	0	0
142	0	0	5	0	5	13	0	0	0	4	0	0	0	0	0	5	0	0	0	0	0
143	0	0	5	0	5	13	0	0	0	4	0	0	0	0	0	5	0	0	0	0	0
144	0	0	5	0	5	13	0	0	0	4	0	0	0	0	0	5	0	0	0	0	0
145	0	0	5	0	5	13	0	0	0	4	0	0	0	0	0	5	0	0	0	0	0
146	0	0	5	0	5	13	0	0	0	4	0	0	0	0	0	5	0	0	0	0	0
147	0	0	5	0	5	13	0	0	0	4	0	0	0	0	0	5	0	0	0	0	0
148	0	0	13	0	18	39	4	0	4	4	0	0	12	0	0	42	56	40	0	0	0
149	0	0	13	0	18	39	4	0	4	4	0	8	12	0	0	44	30	24	0	0	0
150	0	0	28	0	28	74	0	0	0	4	0	8	0	0	0	54	13	0	0	0	28
151	0	0	26	0	26	70	0	0	0	4	0	12	0	0	0	61	13	0	0	0	0
152	0	0	34	0	34	88	0	0	0	28	0	0	16	0	0	51	0	0	0	0	0
153	0	0	0	0	0	0	0	0	0	0	0	0	0	0	0	0	0	0	0	0	0
154	0	0	0	0	0	0	0	0	0	0	0	0	0	0	0	0	0	0	0	0	0
155	0	0	0	0	0	0	0	0	0	0	0	0	0	0	0	0	0	0	0	0	0
156	0	0	0	0	0	0	0	0	0	0	0	0	0	0	0	0	0	0	0	0	0
157	0	0	14	0	20	43	7	0	7	4	0	0	33	0	0	110	175	76	0	0	0
158	0	0	19	0	78	110	59	0	59	4	0	99	155	0	0	206	224	274	0	0	0
159	0	0	5	0	57	65	52	0	52	4	0	99	136	0	0	172	205	258	0	0	0
160	0	0	44	0	44	116	0	0	0	4	0	86	0	0	0	110	49	68	0	0	142
161	0	0	44	0	44	116	0	0	0	4	0	86	0	0	0	357	194	36	0	0	142
162	0	0	81	0	81	211	0	0	0	4	0	0	242	0	0	456	260	36	0	0	0
163	0	0	52	0	52	136	0	0	0	174	0	0	242	0	0	428	96	0	0	0	0
164	0	0	5	0	41	49	36	0	36	4	0	0	96	0	0	350	0	0	0	0	0
165	0	0	5	0	41	49	36	0	36	4	0	0	96	0	0	285	0	0	0	0	0
166	0	0	5	0	5	13	0	0	0	4	0	0	0	0	0	249	0	0	0	0	0
167	0	0	5	0	5	13	0	0	0	4	0	0	0	0	0	5	0	0	0	0	0
168	0	0	5	0	5	13	0	0	0	4	0	0	0	0	0	5	0	0	0	0	0
169	0	0	5	0	5	13	0	0	0	4	0	0	0	0	0	5	0	0	0	0	0
170	0	0	0	0	0	0	0	0	0	0	0	0	0	0	0	0	0	0	0	0	0
171	0	0	0	0	0	0	0	0	0	0	0	0	0	0	0	0	0	0	0	0	0
172	0	0	0	0	0	0	0	0	0	0	0	0	0	0	0	0	0	0	0	0	0
173	0	0	0	0	0	0	0	0	0	0	0	0	0	0	0	0	0	0	0	0	0
174	0	0	0	0	0	0	0	0	0	0	0	0	0	0	0	0	0	0	0	0	0
175	0	0	0	0	0	0	0	0	0	0	0	0	0	0	0	0	0	0	0	0	0
176	0	0	0	0	0	0	0	0	0	0	0	0	0	0	0	0	0	0	0	0	0
177	0	0	0	0	0	0	0	0	0	0	0	0	0	0	0	0	0	0	0	0	0
178	0	0	0	0	0	0	0	0	0	0	0	0	0	0	0	0	0	0	0	0	0
179	0	0	0	0	0	0	0	0	0	0	0	0	0	0	0	0	0	0	0	0	0
180	0	0	0	0	0	0	0	0	0	0	0	0	0	0	0	0	0	0	0	0	0
181	0	0	0	0	0	0	0	0	0	0	0	0	0	0	0	0	0	0	0	0	0
182	0	0	0	0	0	0	0	0	0	0	0	0	0	0	0	0	0	0	0	0	0
183	0	0	0	0	0	0	0	0	0	0	0	0	0	0	0	0	0	0	0	0	0
184	0	0	0	0	0	0	0	0	0	0	0	0	0	0	0	0	0	0	0	0	0
185	0	0	0	0	0	0	0	0	0	0	0	0	0	0	0	0	0	0	0	0	0
186	0	0	0	0	0	0	0	0	0	0	0	0	0	0	0	0	0	0	0	0	0
187	0	0	0	0	0	0	0	0	0	0	0	0	0	0	0	0	0	0	0	0	0
188	0	0	0	0	0	0	0	0	0	0	0	0	0	0	0	0	0	0	0	0	0
189	0	0	0	0	0	0	0	0	0	0	0	0	0	0	0	0	0	0	0	0	0
190	0	0	0	0	0	0	0	0	0	0	0	0	0	0	0	0	0	0	0	0	0
191	0	0	0	0	0	0	0	0	0	0	0	0	0	0	0	0	0	0	0	0	0
192	0	0	0	0	0	0	0	0	0	0	0	0	0	0	0	0	0	0	0	0	0
193	0	0	0	0	0	0	0	0	0	0	0	0	0	0	0	0	0	0	0	0	0
194	0	0	0	0	0	0	0	0	0	0	0	0	0	0	0	0	0	0	0	0	0
195	0	0	0	0	0	0	0	0	0	0	0	0	0	0	0	0	0	0	0	0	0
196	0	0	0	0	0	0	0	0	0	0	0	0	0	0	0	0	0	0	0	0	0
197	0	0	0	0	0	0	0	0	0	0	0	0	0	0	0	0	0	0	0	0	0
198	0	0	0	0	0	0	0	0	0	0	0	0	0	0	0	0	0	0	0	0	0
199	0	0	0	0	0	0	0	0	0	0	0	0	0	0	0	0	0	0	0	0	0
200	0	0	0	0	0	0	0	0	0	0	0	0	0	0	0	0	0	0	0	0	0
201	0	0	0	0	0	0	0	0	0	0	0	0	0	0	0	0	0	0	0	0	0
202	0	0	0	0	0	0	0	0	0	0	0	0	0	0	0	0	0	0	0	0	0
203	0	0	0	0	0	0	0	0	0	0	0	0	0	0	0	0	0	0	0	0	0
204	0	0	0	0	0	0	0	0	0	0	0	0	0	0	0	0	0	0	0	0	0

AAWT (divided by 5 working days)

Receptor	A (76)	B (76)	C (64)	D (68)	E (41)	F (27)	G (23)	H (21)	I (23)	J (26)	K (30)	L (69)	M (58)	N (51)	O (16)	P (15)	Q (7)	R (2)	S (3)	T (3)	U (42)
Year 1 (Weeks 0-47)	0	0	0	0	0	1	0	0	0	0	0	0	0	0	0	1	6	6	0	0	1
Year 2 (Weeks 53-99)	0	0	12	0	13	33	1	0	1	1	0	2	5	0	12	35	29	25	0	0	1
Year 3 (Weeks 105-15	0	0	11	0	12	30	2	0	2	5	0	2	6	0	0	24	4	6	0	0	2
Year 4 (Weeks 157-20	0	0	1	0	2	4	1	0	1	1	0	2	4	0	0	11	5	3	0	0	1

AADT (divided by 7 days)

Receptor	A (76)	B (76)	C (64)	D (68)	E (41)	F (27)	G (23)	H (21)	I (23)	J (26)	K (30)	L (69)	M (58)	N (51)	O (16)	P (15)	Q (7)	R (2)	S (3)	T (3)	U (42)
Year 1 (Weeks 0-47)	0	0	0	0	0	1	0	0	0	0	0	0	0	0	0	1	4	4	0	0	1
Year 2 (Weeks 53-99)	0	0	9	0	9	23	1	0	1	0	0	2	4	0	8	25	20	18	0	0	1
Year 3 (Weeks 105-15	0	0	8	0	9	22	1	0	1	4	0	1	4	0	0	17	3	4	0	0	1
Year 4 (Weeks 157-20	0	0	1	0	1	3	1	0	1	1	0	1	3	0	0	8	4	2	0	0	1

Input Spreadsheet

| Total (HGV) | | | 1812 | 0 | 0 | 0 | 9342 | 0 | 0 | 0 | 1338 | 0 | 0 | 878 | 562 | 0 | 0 | 3520 | 0 | 0 | 0 | 0 | 1302 | 0 | 0 | 0 | 0 | 4892 | 0 | 0 | 0 | 0 | 0 | 0 | 2646 | 0 | 160 | 0 | 0 | 0 | 7660 | 1468 | 0 | 318 | 3134 | 0 | 0 | 0 | 900 | 1416 | 0 | 1248 | 0 | 1550 | 0 | 0 | 0 | 1182 | 1816 | 0 | 0 | 0 | 1320 | 5778 | 11438 | 892 | 0 | 0 | 644 | 986 | 0 |
|---|---|---

| Total (HGV) | | | 1812 | 0 | 0 | 0 | 9342 | 0 | 0 | 0 | 1338 | 0 | 0 | 878 | 562 | 0 | 0 | 3520 | 0 | 0 | 0 | 0 | 1302 | 0 | 0 | 0 | 0 | 4892 | 0 | 0 | 0 | 0 | 0 | 2646 | 0 | 160 | 0 | 0 | 0 | 7660 | 1468 | 0 | 318 | 3134 | 0 | 0 | 0 | 900 | 1416 | 0 | 1248 | 0 | 1550 | 0 | 0 | 0 | 1182 | 1816 | 0 | 0 | 0 | 1320 | 5778 | 11438 | 892 | 0 | 0 | 644 | 986 | 0 |
|---|---|---

Input Spreadsheet

| Total (LGV) | | | 2178 | 2050 | 2050 | 0 | 33900 | 0 | 0 | 2050 | 1026 | 0 | 0 | 456 | 480 | 2050 | 2050 | 2358 | 0 | 0 | 0 | 2050 | 750 | 0 | 0 | 2050 | 2050 | 2238 | 0 | 0 | 0 | 0 | 0 | 0 | 1416 | 0 | 60 | 0 | 2050 | 2050 | 54546 | 966 | 0 | 192 | 1728 | 0 | 0 | 2050 | 648 | 672 | 2050 | 708 | 0 | 642 | 2050 | 0 | 0 | 780 | 1116 | 0 | 0 | 0 | 828 | 16338 | 52254 | 468 | 0 | 2050 | 444 | 7182 | 0 |
|---|---|---

| Total (LGV) | | | 2178 | 2050 | 2050 | 0 | 33900 | 0 | 0 | 2050 | 1026 | 0 | 0 | 456 | 480 | 2050 | 2050 | 2358 | 0 | 0 | 0 | 2050 | 750 | 0 | 0 | 2050 | 2050 | 2238 | 0 | 0 | 0 | 0 | 0 | 0 | 1416 | 0 | 60 | 0 | 2050 | 2050 | 54546 | 966 | 0 | 192 | 1728 | 0 | 0 | 2050 | 648 | 672 | 2050 | 708 | 0 | 642 | 2050 | 0 | 0 | 780 | 1116 | 0 | 0 | 0 | 828 | 16338 | 52254 | 468 | 0 | 2050 | 444 | 7182 | 0 |
|---|---|---

| Total (LGV) | | | 2178 | 2050 | 2050 | 0 | 33900 | 0 | 0 | 2050 | 1026 | 0 | 0 | 456 | 480 | 2050 | 2050 | 2358 | 0 | 0 | 0 | 2050 | 750 | 0 | 0 | 2050 | 2050 | 2238 | 0 | 0 | 0 | 0 | 0 | 0 | 1416 | 0 | 60 | 0 | 2050 | 2050 | 54546 | 966 | 0 | 192 | 1728 | 0 | 0 | 2050 | 648 | 672 | 2050 | 708 | 0 | 642 | 2050 | 0 | 0 | 780 | 1116 | 0 | 0 | 0 | 828 | 16338 | 52254 | 468 | 0 | 2050 | 444 | 7182 | 0 |
|---|---|---

© WSP Environment & Infrastructure Solutions UK Limited

Annex B Figures

© WSP Environment & Infrastructure Solutions UK Limited

Page intentionally blank

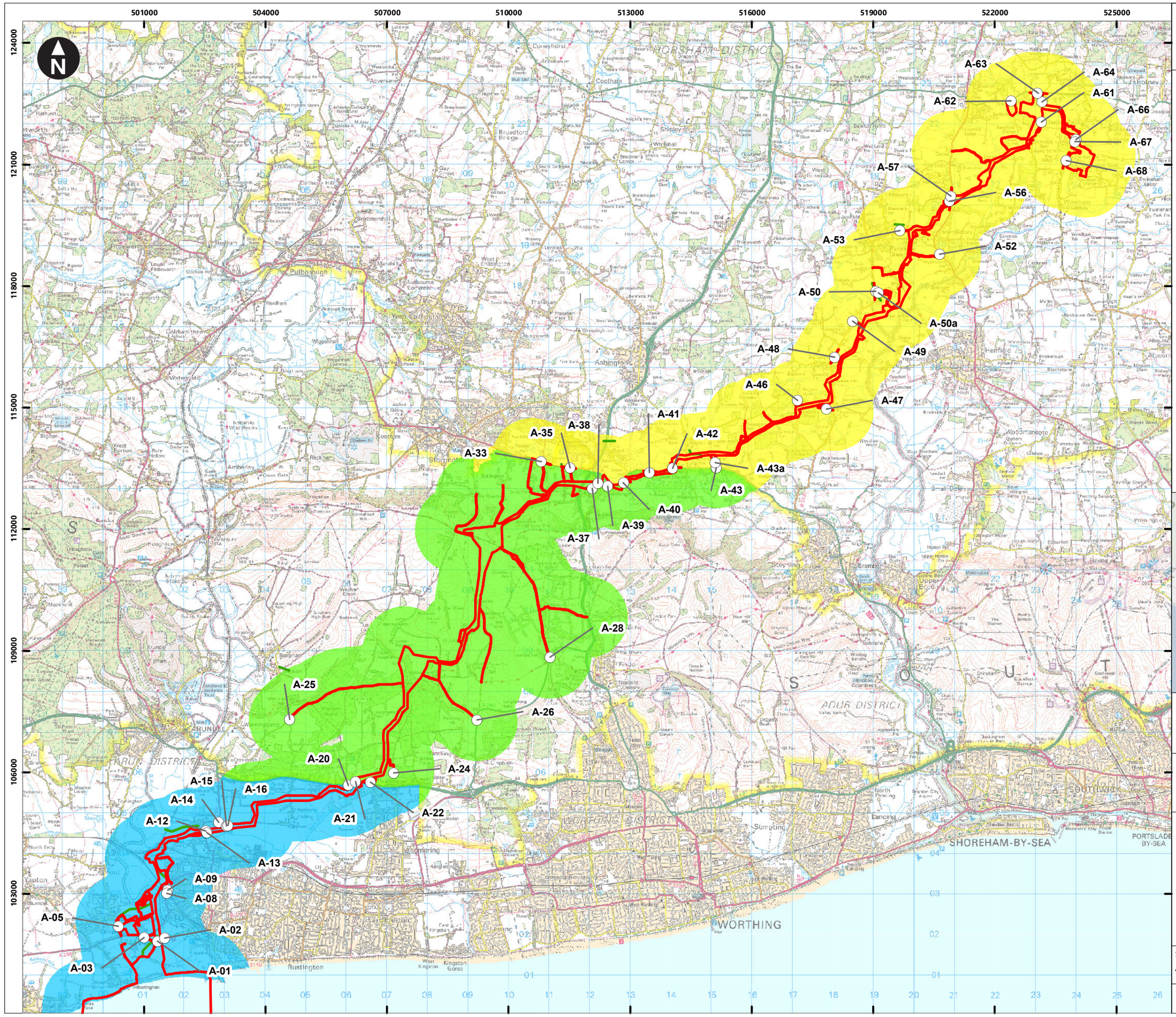

Service Layer Credits: Contains OS data © Crown Copyright and database right 2020

© Crown copyright and database rights [2023] Ordnance Survey 0100031673

Key

- Proposed DCO Order Limits
- Access from public highway during construction
- Access track
- TCC A-62, A-63, A-68
- TCC A-39
- TCC A-05

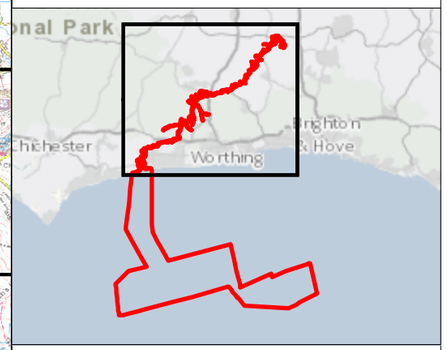

Kilometres

0 0.5 1 2 3 4

1:90,000

British National Grid Transverse Mercator

Rampion Extension Development

Rampion 2 WIND FARM

Rampion 2 Offshore Wind Farm

Figure 23.2.1 Onshore route Temporary Construction Compound (TCC) Sections and accesses from public highways

Traffic Generation Technical Note

Environmental Statement

System Identifier:	Version:
42285-WSPE-ES-ON-FG-OT-8516	1.0

Company:	Drawn By:	Chk/Aprvd:	Drawn Date:	Status:
WSP	SHEPS	SUTET	08/08/2023	Draft

Document uncontrolled when printed ISO A3 Landscape

© WSP Environment & Infrastructure Solutions UK Limited

Page intentionally blank

Rampion 2
WIND FARM